AE-MAESTRO

Integrated Lift Control System

USER MANUAL

AYBEY ELEKTRONİK

Document Name : AE-MAESTRO User Manual
Document Code : AEM-UMEN
Document Version : 1.07
Software Version : 1.45r

INDEX

PREFACE

AE-MAESTRO is an integrated lift control system. It consists of a lift controller and a motor driver in one device. An integrated device has important benefits when compared to the classical approach having a lift controller and a motor driver, separately. Wiring and adjusting an integrated device is much simpler. All of the wiring and parameters necessary to interface the motor driver and the controller are not implemented. Motor motion is controlled directly by lift software. So maximum efficiency in motion control is achieved.

In this manual, you will find detailed information about AE-MAESTRO. However, since there are continuous developments in software it is possible that the software version you are using may not be fully compatible with this manual. If this is the case, you can download the most recent manual from www.aybey.com.

You can send a mail to destek@aybey.com either to get more technical information about the system or to send any comments. Please feel free to contact us for any problems or suggestions. Bear in mind that all these systems have been developed mainly by benefiting from the criticism of customers and users.

Aybey Elektronik

CHAPTER 1 - DESCRIPTION OF THE SYSTEM

1.1) GENEREAL DESCRIPTION OF THE DEVICE

AE-MAESTRO includes **lift controller** and **motor driver** in one device, ILC. It also includes **EMC filter, dc choke coil** and **rescue system isolating circuits** inside the device. Therefore, it provides full EMC compatibility with this feature. This compact feature also leads to cost reduction and simplicity in panel manufacturing.

AE-MAESTRO has a very powerful structure. It has a **double micro architecture**. One DSP, digital signal processor has been dedicated to motor driving job. Another powerful microprocessor controls lift functions and shaft signals. So, high performance in driving motor and integration of the lift controller is achieved.

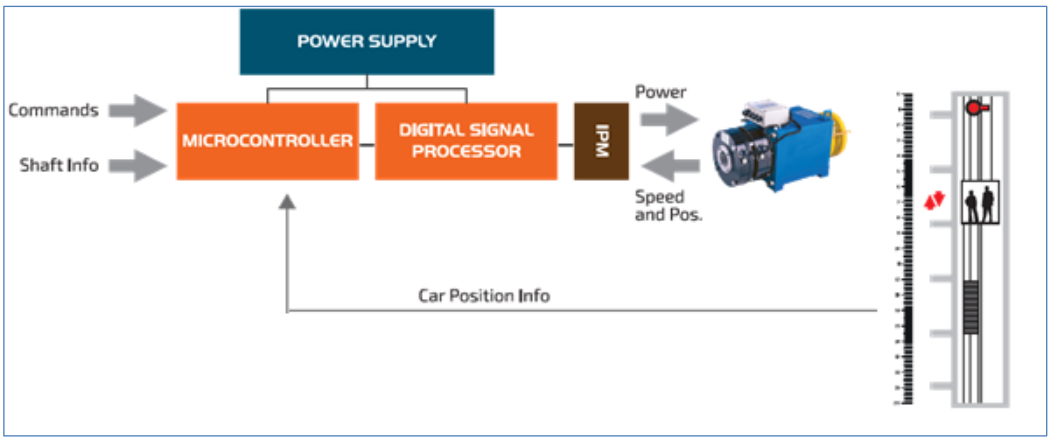

Figure 1.1a

AE-MAESTRO is a certified **STO** device. Therefore, there are no contactors between the motor driving outputs of the device and the motor. Motor windings are connected directly to the device. Contactor-less control system has several advantages. The first one is the reduction of the cost of the materials used. The second one is significant noise reduction due to absence of the switching elements in the panel. The absence of the mechanical switching elements at the output of the motor driving transistors (IGBT) is in fact the most important advantage in technical aspect. The fact that IGBT currents are always damping naturally in motor windings instead of cut mechanically by any element extends the life of these vital elements considerably.

Figure 1.1b

The device is supplied to comply the requirements of EN81-20 / 50 lift standards for electric lifts. However, it can be used also in conformity to EN81-1+A2 or EN81-1+A3 standards by adjusting related parameters. It supports a wide range of lift applications for up to 64 floors.

AE-MAESTRO makes use of intelligent electronic units communicating via CAN-BUS in the overall lift system. The system comes with three CAN ports which provide flexibility in connecting CAN-units. The communication hardware between car and controller is designed to be a fault tolerant CAN to increase the robustness to against any electronic disturbances in the connection.

AE-MAESTRO supports parallel and serial communications for landing panels and group operations for up to 8 lifts. There are various function boards in AE-MAESTRO system to support specific functions and increase flexibility. It also has integrated lift access control system and VIP travel facilities in its software to restrict the use of the lift.

AE-MAESTRO has advanced data communication facilities. There are interfaces for ethernet and USB connections. So, the parameters in the controller can be edited or the motion of the lift can be observed either by a computer or a mobile device locally as well as via the internet.

1.2) SERIAL COMMUNICATION AND CONFIGURATIONS

The communication between car and controller is serial. There are three CAN ports where C0 and C1 are already built in the device. C2 needs a CAN interface board to be used. Landing panels can be connected in both ways, serial or parallel. The serial interfaces between car and controller is low speed, fault tolerant mode where the interface for landings can be selected as low speed fault tolerant or high speed. The terminal board used in the controller depends on the serial configuration as well as prewiring or standalone cases and these are explained in section 2.3.

1.3) DOORS

The device supports two car doors. There is separate door open, door close, photocell and door limit inputs for each door. There are also various timers associated with doors. Adequate door open checking tests in conformity to the lift standard EN81-20/50 have been developed for one and two doors as well as full and semi-automatic doors. The door bridging board SDB is required to test the doors at arrival when EN81-20/50 standard is selected [A10=2]. Therefore, SDB board must be plugged into ILC even when no relevelling or door pre-opening facilities are requested but if the standard has been selected as EN81-20/50 if EN81-20/50.

1.4) CAN PORTS

There are three CAN ports. Two of them, C0 and C1, are on board as standard. C0 is low speed and works in fault tolerant mode. C0 is used as default for the car circuit. C1 is high speed CAN-port and used as default for landing panels. However, any CAN port can be configured for any circuit (landing, car, group, absolute encoder, etc.). CAN ports can be configured by means of E7... E10 parameters.

1.5) SAFETY LINE

1.5.1) Safety line voltage:

The power supply of the safety circuit is labelled as 110 and 150, where 110 is the starting terminal and 150 is the return terminal. Safety Circuit Voltage can be selected by the customer. The voltages to be selected for safety circuit are 48Vdc, 220/230Vac

1.5.2) Safety line structure:

Safety line starts to flow from the terminal 110 into the shaft devices. All devices, through which the safety line passes before lift doors, are to be between 110 and 120. 120 is the starting point of the door safety contacts. The door circuit ends at the terminal 140. 140 is the end of the safety line. When any door or any safety contact in the shaft is open then there must be no voltage present at terminal 140. If it is present then this means a wrong wiring or any fault in the devices.
The connection terminals of the shaft and the door contacts are found in wiring diagrams of the related application. There are various connection diagrams for specific lift standards, lift applications, door types and number of doors. Please check first if the given electric diagram matches your application exactly. Otherwise consult our support department to get the appropriate wiring diagram before starting.

The labels 120 … 140 on the left side of the LED display on the device show the closed terminals of the safety line directly.

1.6) Contactor-less application (STO Safe Torque Off)

AE-MAESTRO is a certified STO device and it can be connected without contactors directly to the motor windings (Safe Torque Off - STO). Contactor-less control system has several advantages. The first one is the reduction of the cost of the materials used. The second one is significant noise reduction due to absence of the switching elements in the panel. The absence of the mechanical switching elements at the output of the motor driving transistors (IGBT) is in fact the most important advantage in technical aspect. The fact that IGBT currents are always damping naturally in motor windings instead of cut mechanically by any element extends the life of these vital elements considerably. The implementation of this feature is explained in section 3.1.2

1.7) PANEL VOLTAGE

Except for the safety line, there is only one power supply in the system which is 24V dc. It is the power source in the controller to supply all electronic boards, signals and detectors. The current rating (power) of the supply must be selected by taking into consideration the current consumption of the panels. However, it should be minimum 75 W.

1.8) INPUTS

All inputs are 100% galvanically isolated from the microcontroller circuit since they are connected via optocouplers to this circuit. Input functions and input terminal assignment procedure are explained in chapter 2.4

1.9) OUTPUTS

All inputs and outputs are 100% galvanically isolated from the microcontroller circuit since they are connected via optocouplers to this circuit. Mainly relays are used as outputs. Output terminals are programmable. The user can assign any function to these programmable output terminals.
Output functions and output terminal assignment procedure are explained in chapter 2.5.

1.10) UNINTENTED CAR MOTION (UCM)

AE-MAESTRO supports numerous UCM test and control facilities for geared and gearless lift systems. UCM facilities are explained in detail in chapter 12**. UCM functions will not be active if parameter A10 has been set for EN81-1+A2, [A10=0].**

1.11) CAR POSITION INFORMATION

Car position information can be collected with magnet switches or encoders. Using encoder signals enables distance-based operation. Nevertheless, ILC supports simple switching method by magnetic switches when there is no encoder used in the system. Car position detection systems will be explained in section 3.2.

1.12) DISTANCE BASED OPERATION

When an encoder (incremental or absolute) has been selected as the car position detector then AE-MAESTRO works in distance-based operation system. In distance-based operation the distance to the target floor is always mm not in number of floors. Distance based operation designs travel paths automatically. All speed transition points, acceleration, deceleration and travel speeds are calculated according to the distance and the maximum speed restricted by the user parameters.

1.13) FIRE FUNCTIONS

ILC supports two lift standards related to fire event, EN81-72 and EN81-73. The standard which will be used in lift operation should be defined in parameter A14. The functions and parameters related to the behaviour of the lift in fire and using it in fire-fighter operation is explained detailed in chapter 9.

1.14) ACCESS CONTROL SYSTEM

Access control utility permits only the users with appropriate permission to use the lift, in other words, it restricts any person who is not allowed to use the lift for a specific floor or time interval. For this purpose, each lift user should have a RFID card or i-Button key with a unique user ID. This utility is present in AE-MAESTRO software. You do not need any access control system to implement it. You only need access control readers in landing and car panels.
Access control system is explained in section 5.3.

1.15) GROUP OPERATION

AE-MAESTRO controller can work in lift groups up to eight lifts. Each group lift must have CSI Can interface board plugged into. One group controller device ICG must be used as group manager. In order to use group operation parameter A07 should be set any number 1..8. If [A07=0] the lift works as simplex, not in group.

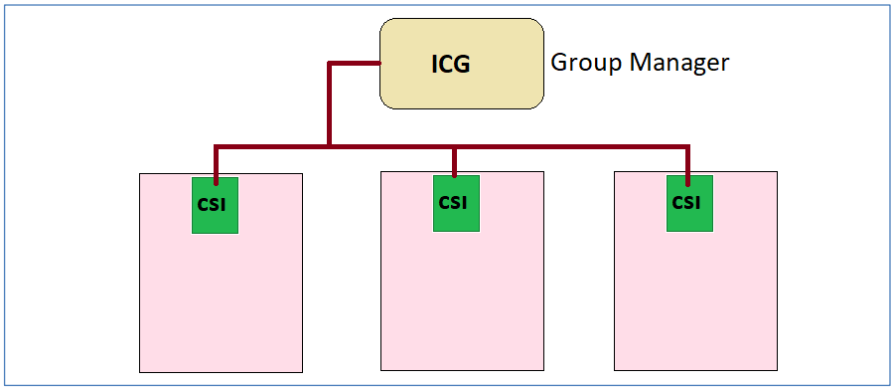

Figure 1.14a

1.16) VIP TRAVEL

ILC has a VIP Travel function. When any of the VIP related input functions VP1 (46), VP2 (47) or VP3 (48) is activated then the lift immediately moves to the floor defined in related parameters [B23], [B24] and [B25] respectively. If the lift is in motion in the same direction with the new target then it continues its travel until reaching the VIP floor. If the motion and the new target directions are opposite then the lift stops at the first floor and reverses its direction towards to the VIP floor and starts its travel again. VP1 has the highest priority, VP2 medium and VP3 the lowest. That means when there are more than one active VIP terminals then the one with the highest priority is selected (VP1 >VP2 > VP3).

1.17) PRIORITY FUNCTION

ILC software has a priority function. This function is very useful in buildings where public lifts are working. In case of emergency these lifts can be called and used as a private lift by inhibiting normal usage. This system works only in full serial systems where landings are serial and requires access control readers (RFID or i-Button) in all landings and cars.
Priority function is explained in section 5.2.

1.18 EN81-21 LOW PIT/LOW HEADROOM APPLICATIONS

EN81-21 standard sets the basic rules to design lifts which do not satisfy shaft requirements of EN81-20/50. ILC supports some special equipments designed for EN81-28 applications. Furthermore, it offers some very general functions. See Chapter 11 for more detailed explanation.

1.19) DATA TRANSFER

AE-MAESTRO supports computer connection via USB or Ethernet by means of Aybey-Net software. By using Aybey-Net a computer can be connected directly, via a local network (LAN) or via the Internet.

Aybey-Net has the following features:

- Lift motion and calls can be observed in real time
- All timings and the status of the inputs and the outputs can be observed in real time
- Error log can be obtained as digital data
- All parameters can be checked and modified.
- All input and output settings can be checked and modified.
- All Parameters can be saved, loaded, transferred and printed.

You can download Aybey-Net software and related drivers from the link http://www.aybey.com/eng/programlar.htm. You can find detailed information to install and use the software in "Aybey-Net Installation Manual".

1.19.1) USB

In order to connect any PC to a lift controller with Aybey-Net via USB it is necessary to have a USN add-on board plugged onto the mainboard. So, the controller can be monitored by a PC in the machine room to adjust the parameters and timers or to detect an error.

1.19.2) Ethernet

In order to connect a PC to a local network (LAN) or to the internet it is necessary to plug the ETN add-on board onto the mainboard. ETN board is the ethernet interface. So, the controller can be accessed by a PC anywhere in the world via internet to adjust the parameters and timers or to detect an error.

1.20 MAINTENANCE CONTROL

There are two independent control systems for maintenance mode activation. The first one is by setting a maintenance time in the future and the second is by specifying a maximum number of starts for the lift. If the adjusted maintenance time or number of starts is exceeded then the lift switches to maintenance mode and does not accept calls anymore. Maintenance control is explained in section 5.4.

1.21) TEST MENU

There is a special utility in ILC system for testing the lift in normal operation by creating random calls. Test menu is explained in section 10.1.

1.22) TIMING

The timing diagram of AE-MAESTRO is shown in Figure 1.21a. The device has two main variables related to motion phases and device stages. This diagram shows what happens when a motion request is received. The line indicated as **control** in Figure 1.21a shows controller stages and the one indicated as **motor** motion phases. These two variables are displayed on the screen of the hand terminal to give information about the motion state of the device (control / motor). It can be easily seen on the timing diagram how the activated and passive

states of device motor output, brake, enable and contactor are changing. By using these two variables, related stages in the time diagram can be identified.

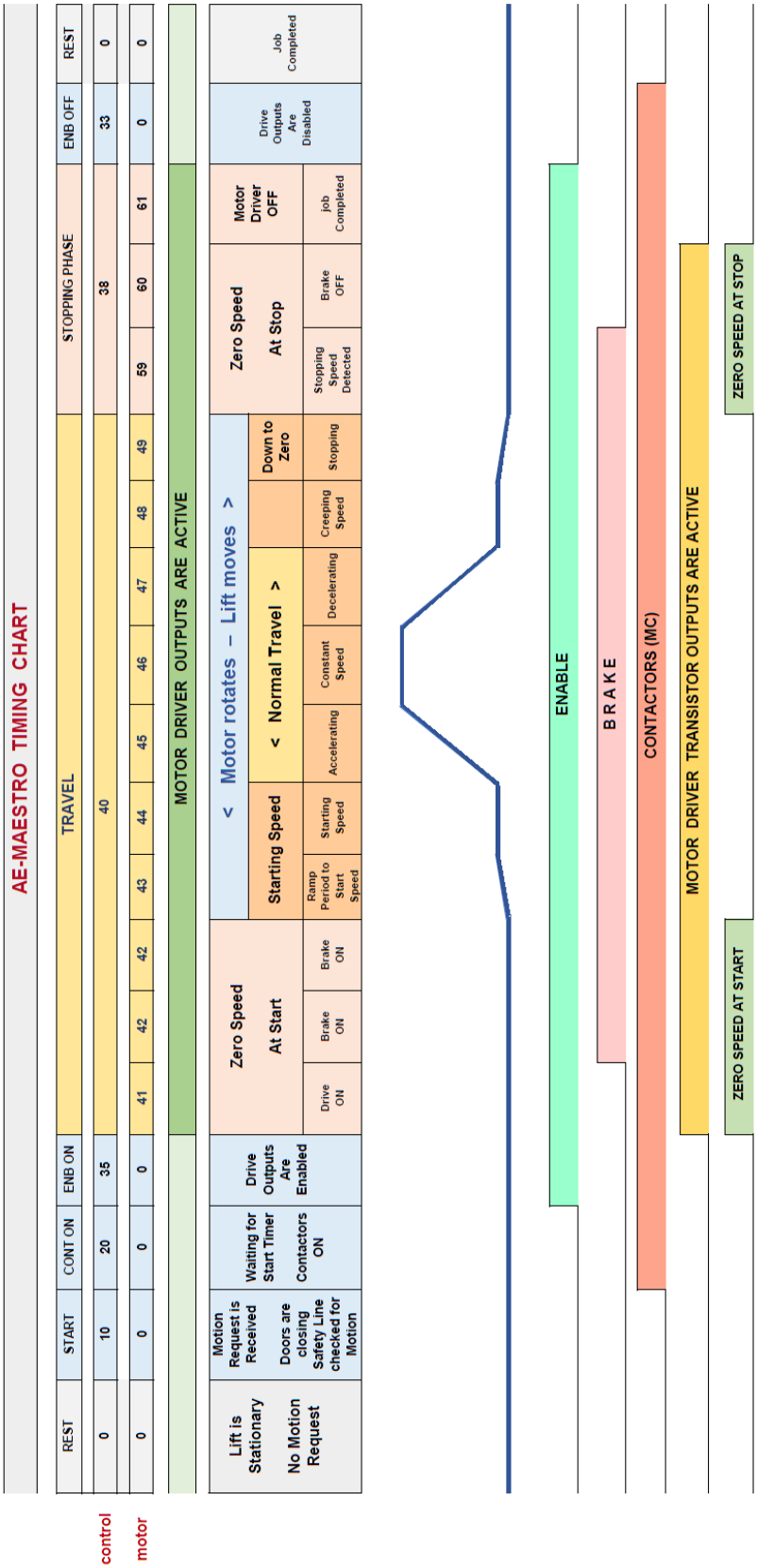

Figure 1.21a

CHAPTER 2 – HARDWARE AND TERMINALS

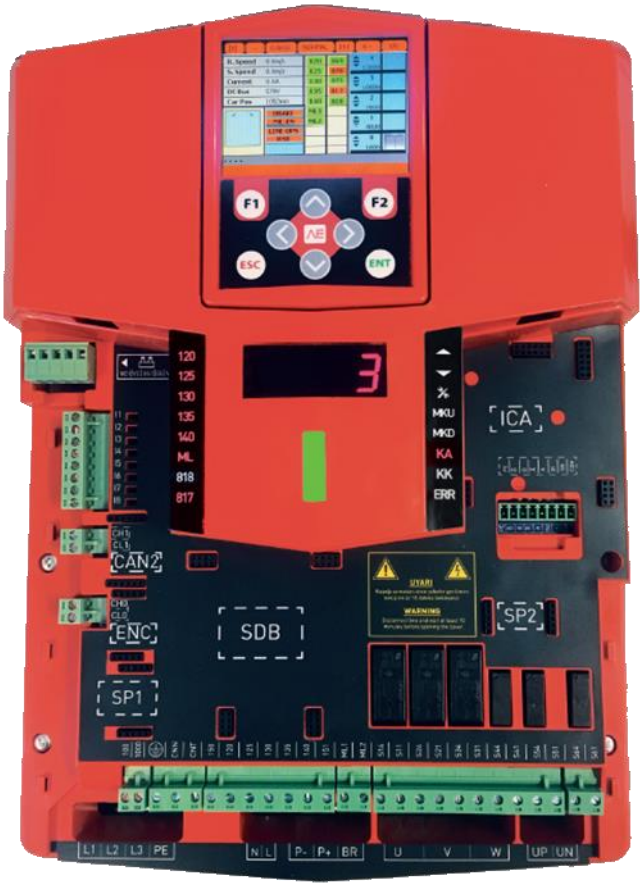

Figure 2.1a

2.1) GENERAL HARDWARE

All terminals of the device are located under the front cover and the places of add-on boards are marked there. Figure 2.1a shows the connection terminals. The device has led indicators and a digital display on the front side. The device is supplied as standard with a dummy cover in place of the TFT screen. TFT screen is optional and can be used on the device as well as anywhere in the shaft where CAN bus is connected.

Main terminal blocks are shown in Figure 2.1b. The main hardware configuration of the AE-MAESTRO is supplied to support EN81-20/50 lift standard. Therefore, almost no additional cards are required in most applications. Two main add-on boards are left as option depending on the standard or motor type. Door bridging and absolute encoder boards. Incremental encoder interface is built in. The device can also be used for the standard EN81-1+A2 or less without door bridging board.

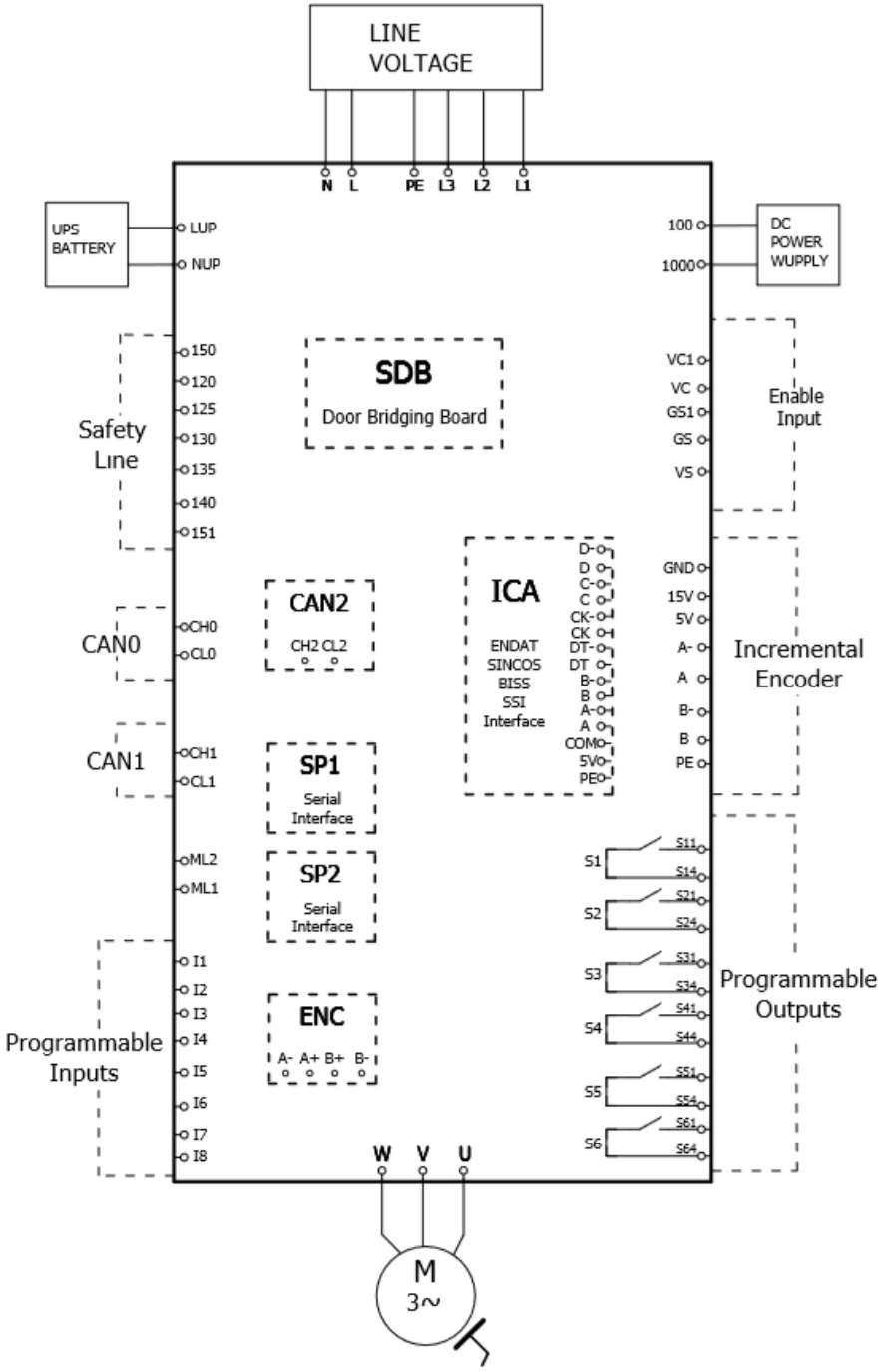

Figure 2.1b

The electronic boards used in ILC and their descriptions are listed below.

SCB : This board is used in the inspection box and works as the car controller board. It collects car calls and detector inputs in car circuit. It contains 5 programmable relay outputs and 12 programmable inputs, 16 call registers, a battery charger for emergency power supply, and hardware for other lift functions in car. It also supports announce system when AFM (Announce Board) board is plugged.

SDB : It is the door bridging board plugged onto AE-MAESTRO.

SGD : It controls the activation of the coil on speed governor.

OUT : This board contains 4 programmable output relays.
INPS : This board contains 4 programmable inputs.
CSI : This is the CAN interface board in fault tolerant mode. It can be used for lift group operation to communicate with other lifts or to have a separate CAN bus for landing panels.
CCI : This is the CAN interface board in high speed mode. It can be used to have a separate CAN bus for landing panels when landing panels have high speed CAN interfaces.
ETN : It is the ethernet interface board and is used to connect a PC to the controller either ~~in~~ with a local area network (LAN) or via the internet.
ETW : It is the Wi-Fi ethernet interface board and is used to connect a PC to the controller either with a local area network (LAN) or via the internet.
USN : USB interface board for local PC connection.
RS232 : RS232 interface board.
IO : It has 8 call registers on it. It is used to increase the number of call registers on ALPK.
CAN-IO : This board communicates via CAN-BUS and serves as a call register. One CAN-IO board has 16 call registers. It is used to expand the number of call registers in car circuit above 16 floors or above 16 call registers in systems where landing panels are not serial.
ALSK : This board is used in systems where landing panels are serial and serves as a terminal board for programmable inputs and outputs in controller and PTC. It contains 8 (12) programmable inputs.
ALPK : This board is used in systems where landing panels are parallel and serves as a call register well as a terminal board for programmable inputs and outputs in controller and PTC. It contains 8 (12) programmable inputs.
SPB: This board serves as a controller in shaft pit. It is communicating via CAN-BUS.
PWH: This board is used only in prewired systems in the inspection box. It serves as the terminal connection board of flexible cable in car.
PWL: This board is used only in prewired systems in the inspection box. It serves as the car controller. It collects car calls and detector inputs in the car top circuit. It contains 5 programmable relay outputs and **14** programmable inputs, a battery charger for emergency power supply, and hardware for other lift functions in car.
AFM: This board is a pluggable module and contains only memory for announcement data. It is used together with SCD, PWS and PWSC boards.
PWS (PWF): This board has been designed to drive **only prewired Aybey car buttons** in prewired systems. It is usually placed into the car operating panel. It collects car calls, drives indicator signals and displays in car panel and carries on in-cabin announcement. Its code is PWF when AFM has been already plugged onto it.
PWSC (PWFC): This board has been designed to drive car buttons in prewired systems. It is usually placed into the car operating panel. It collects car calls, drives indicator signals and displays in car panel and carries on in-cabin announcement. Its code is PWFC when AFM has been already plugged onto it.
APE: This board is used only in prewired systems as an extension to PWS. It has 16 car call registers on it and increases the number of car calls.
HTKL (KLN/KLU): They are terminal boards for the controller box in pre-wired systems.

2.2) MONITORING TOOLS AND SYSTEMS

2.2a) Front LED Panel

ILC is equipped with a digital LED panel and 16 LED indicators.

There are 16 LED indicators in two columns. They give information about the status of some important variables. LED panel is used by default to show current floor number. However, it can be used to monitor a number of variables, too. This can be done by adjusting parameter D03.

There is bar between two LED columns. It shows the state of the system. Green means normal mode and yellow inspection mode. The colour changes to red in case of any error. In case of any motion the bar flashes.

2.2b) TFT Display

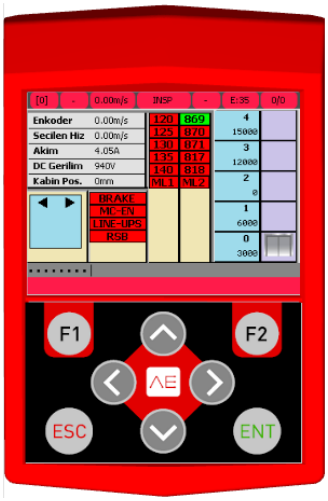

TFT intelligent hand terminal can be used on the device as well as anywhere in the shaft.
It is an optional unit. It has a SD card socket. It can be used to update software of the device as well as carry parameters. The travel speed curves can be observed on the device.

2.3) CAR AND LANDING STATIONS

2.3.1) Connections between Car, Landings and Controller

The landing panels can be connected as serial or parallel. When landings are parallel then the configuration is called “car serial” and when landings are serial then the configuration is called “full serial”. The serial interfaces between car and controller is low speed, fault tolerant mode where the interface for landings can be selected as low speed fault tolerant or high speed. Boards and connections in prewired system is shown in Figure 2.3a. The landing units used in prewired system are the same as the ones in full serial communication, only car circuit is different.

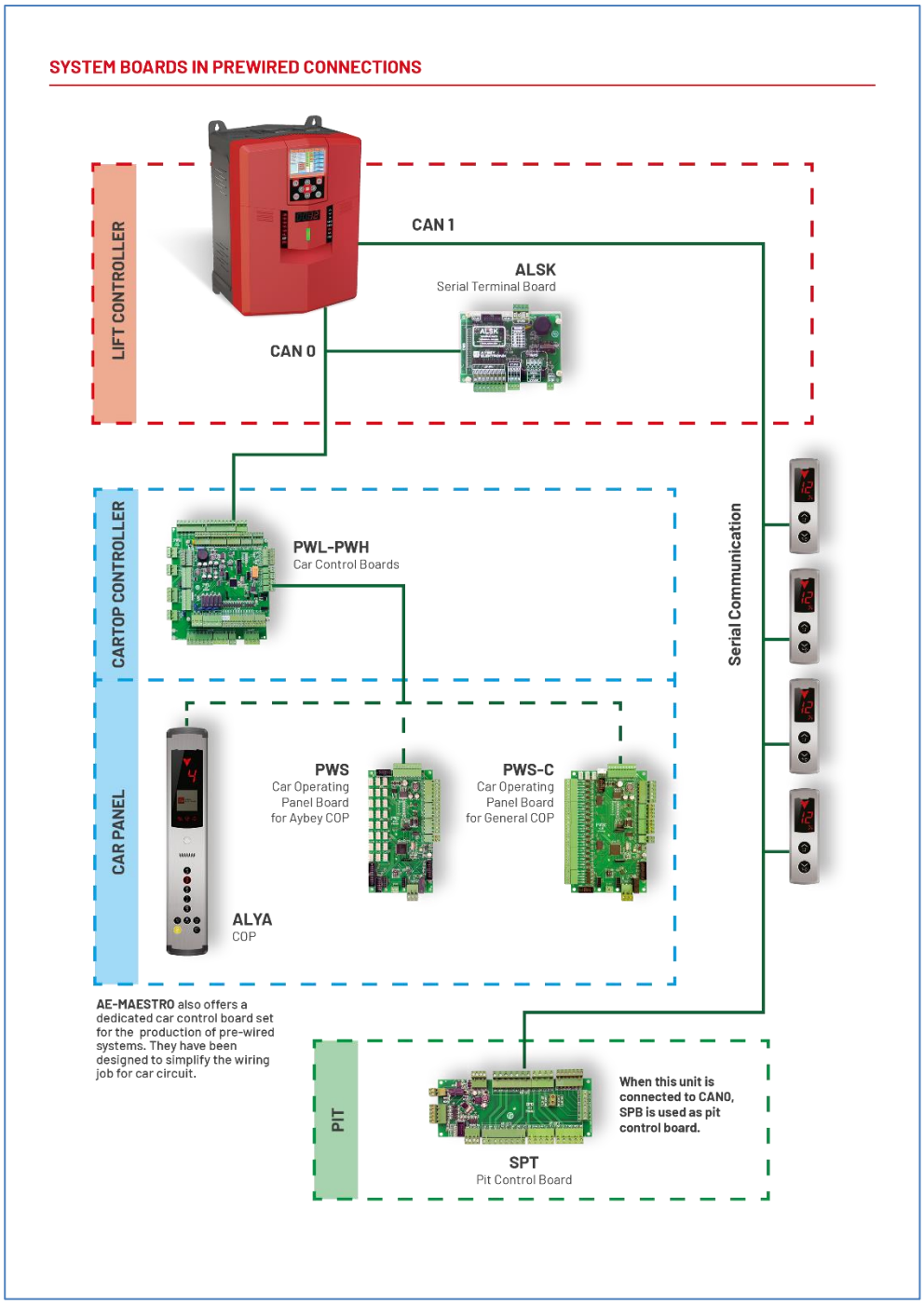

Figure 2.3a

Boards and connections in non-prewired, parallel system is shown in Figure 2.3b. However the landing units can also be connected in series as in previous figure.

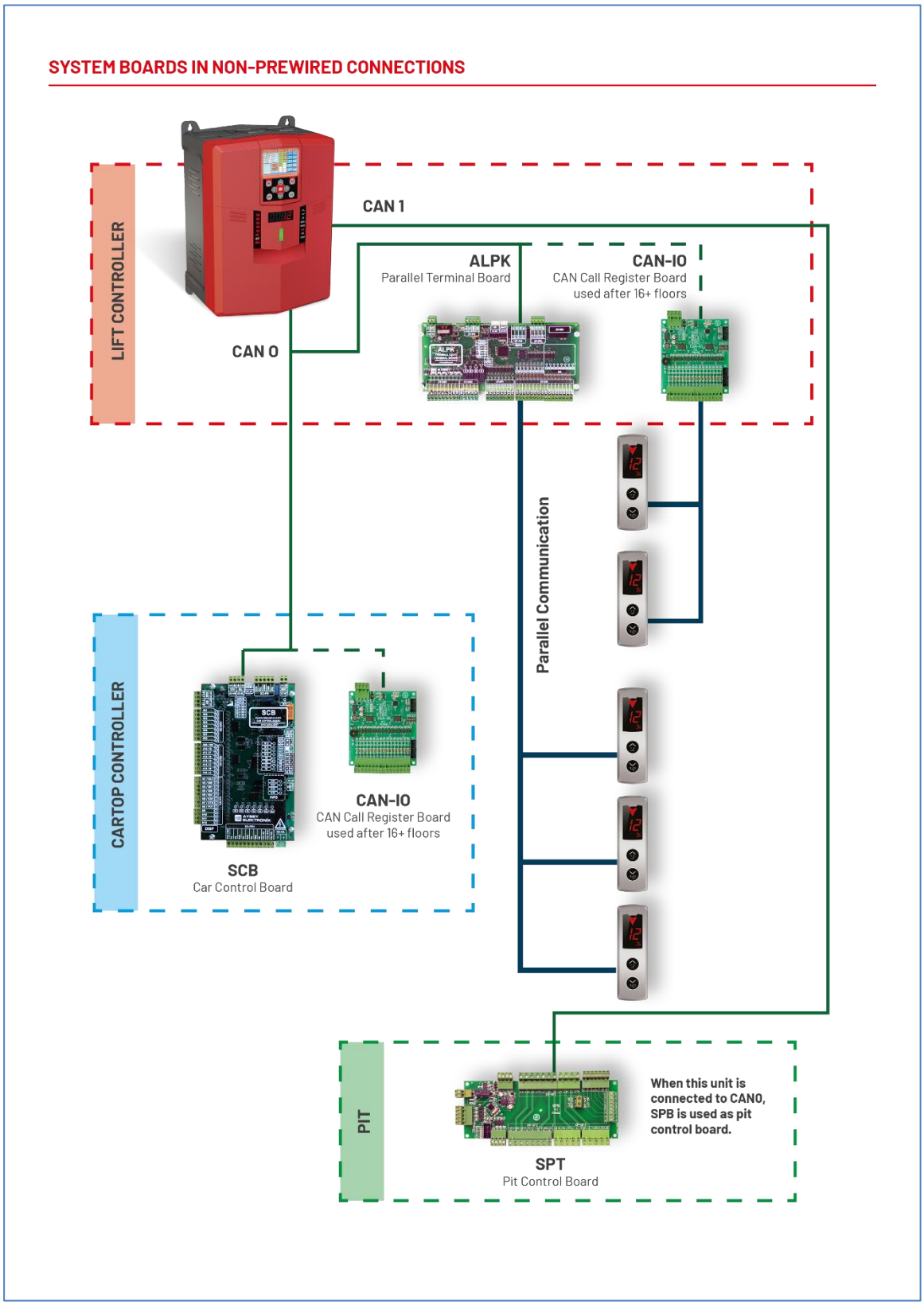

Figure 2.3b

2.3.2) CAR CALLS:

i) **Not prewired systems**: Car calls are collected by the car controller board SCB for up to 16 stops. For more than 16 stops CAN-IO boards must be connected to the car circuit to collect car calls. Each CAN-IO board has a 16-stop capacity.

ii) **Prewired systems**: Car calls are collected by the car controller board PWS for up to 16 stops. For more than 16 stops APE boards must be connected to the car circuit to collect car calls. Each APE board has a 16-stop capacity.

2.3.3) LANDING CALLS:

i) **Car Serial Systems:** The terminal board ALPK has 8 call registers onboard. An I/O board can be plugged onto ALPK to increase the number of call registers to 16. For greater numbers, CAN-IO boards must be added to increase number of landing call registers. Each CAN-IO board has 16 call registers.

iii) **Full serial systems:** CAN landing units collect and send calls at the landings. No additional board is required for any number of stops. The landing panels used in this application must have Aybey CAN protocol.

2.4) INPUT HARDWARE

All inputs except ML1-ML2 and safety circuit are active low. It means that an active state from a detector is monitored when this input is connected to the ground reference (0V) of dc power supply. See Figure 2.4a. All inputs are 100% galvanically isolated from the microcontroller circuit since they are connected via optocouplers to this circuit.

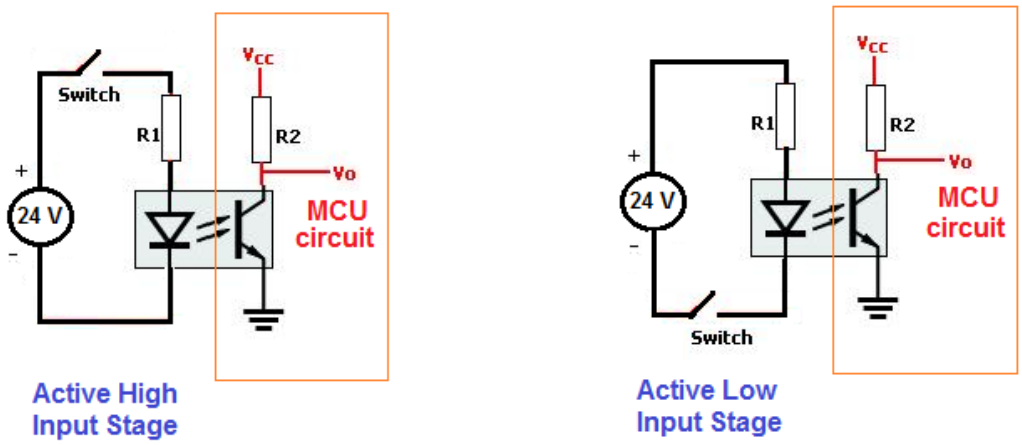

Figure 2.4a

Due to its flexible structure, the input terminals of AE-MAESTRO Series control system are distributed to a number of boards. The places of these terminals are listed below.

INPUT NO	PLACE / SOCKET	BOARD NAME	TERMINAL NAME
I1…I8	PANEL / TERMINAL	ICM	I1…I8
I9…I16	PANEL / TERMINAL	ALSK / ALPK	I9…I16
I21…I24	PANEL / TERMINAL	ALSK (INPS) ALPK (INPS)	I21…I24
N1…N12	CAR / TERMINAL	SCB / PWL	N1…N12
N13…N16	CAR / TERMINAL	SCB (INPS) PWL (INPS)	I1…I4
N17	CAR / TERMINAL	PWS	N17
N18…N21	CAR / TERMINAL	PWS (INPS)	I1…I4
Y1…Y7	PIT CONTROLLER	SPB/SPT	Y1…Y7

Table 2.4a The locations of input terminals

2.5) INPUT FUNCTIONS

There are a number of defined input functions in AE-MAESTRO software. Each input function has a unique function number. Some input terminals are assigned to a specific function as default by the system, such as ML1, ML2 and safety line whereas the others are programmable. The user can assign any function to these programmable input terminals

Table 2.5b Input Functions

INPUT NO	INPUT CODE	EXPLANATION	DEFINITION	ACTIVE STATE
1	869	Car Top Inspection Switch	USER	OFF
2	870	Recall Operation Switch	USER	ON
3	871	Pit Inspection Switch	USER	OFF
4	817	High Speed Limit at bottom	USER	OFF
5	818	High Speed Limit at top	USER	OFF
6	500	Car Inspection Motion Button Down	USER	ON
7	501	Car Inspection Motion Button Up	USER	ON
8	550	Recall Motion Button Down	USER	ON
9	551	Recall Motion Button Up	USER	ON
10	BYP	Bypass Switch	USER	OFF
11	510	Pit Inspection Motion Button Down	USER	ON
12	511	Pit Inspection Motion Button Up	USER	ON
13	KRR	Pit Inspection Reset Switch	USER	TOGGLE
14	MKD	Stopper in down direction	USER	ON
15	MKU	Stopper in up direction	USER	ON
16	804	Overload contact (NO)	USER	ON
17	805	Full Load Contact	USER	ON
18	K20	Door Open Button for Door 1	USER	ON
19	DTS	Door Close Button for Door 1	USER	ON
20	FOT	Photocell Contact for Door 1	USER	ON
21	AL1	Door Open Limit for Door 1	USER	ON
22	KL1	Door Close Limit for Door 1	USER	ON
23	K1C	Obstruction Contact for Door 1	USER	OFF

24	BR1	Brake Contact of the traction machine (Brake 1)	USER	info
25	BR2	Brake Contact of the traction machine (Brake 2)	USER	info
26	SGC	Overspeed Governor Contact (Normally Closed)	USER	ON
27	SGO	Overspeed Governor Contact (Normally Open)	USER	OFF
28	DTP	Door Motor Temperature If the door motor overheats then this input function is activated and the controller prevents any motion.	USER	OFF
29	K22	Door Open Button for Door 2	USER	ON
30	DT2	Door Close Button for Door 2	USER	ON
31	AL2	Door Open Limit for Door 2	USER	ON
32	KL2	Door Close Limit for Door 2	USER	ON
33	K2C	Obstruction Contact for Door 2	USER	OFF
34	FT2	Photocell for Door 2	USER	ON
35	PFK	When activated it means that safety gear has been enabled.	USER	OFF
36	EKS	RESCUE switch If this input is active and FKK input is inactive at start-up, then the system starts in Rescue mode.	USER	ON
37	HD	High speed limit in down direction This input is used in lift applications above 1,2 m/s	USER	OFF
38	HU	High speed limit in up direction This input is used in lift applications above 1,2 m/s	USER	OFF
39	MCI	When motor contactor activated, this input must be active also.	USER	ON
40	M0	Floor counter input for bi-stable magnetic switches when A05=2.	USER	ON / OFF
41 42	FR1 FR2	Fire Input Switch An active signal at this input switches the system to fire mode. See chapter 9.	USER	OFF
43	FRM	Fireman Switch at the ground floor. See chapter 9.	USER	ON
44	FRC	Fireman Switch in car panel. See chapter 9.	USER	ON
45	DSB	Disable Switch When this switch is active, any lift motion is inhibited. However, relevelling will be carried out when needed.	USER	ON
46	VP1	VIP input 1 When an active signal is present at this input then the lift moves to the floor specified in parameter [B33] FIRST VIP FLOOR	USER	ON
47	VP2	VIP input 2 When an active signal is present at this input then the lift moves to the floor specified in parameter [B34] SECOND VIP FLOOR	USER	ON
48	VP3	VIP input 3 When an active signal is present at this input then the lift moves to the floor specified in parameter [B35] THIRD VIP FLOOR	USER	ON

49	THR	Machine Room temperature control input. This input is used to get information about the machine room temperature. When the machine room temperature is outside the defined temperature range defined in lift standard then this input should be ON by an external temperature measuring device.	USER	OFF
50	LDB	Loading Button This input function is used to hold automatic door open for a long-period of time during loading. Holding time is determined by parameter [C31]: LOADING PERIOD. Any door close request except DTS /DT2 will be ignored during this period.	USER	ON
51	WTM	Liftman Switch When activated hall calls are inhibited.	USER	ON
52	UCR	This input can be used to clear a raised UCM ERROR. If there is an active UCM error present then changing the state of this input (toggle switch), when the lift is in inspection mode and resting, clears the error.	USER	ON
53	917	Bottom Level Limit Switch This input function operates only when [A05<4] and [A17=1]. When there are more than one floor after 817 switch downwards then the bottom floor is informed to the controller by an open 917 input terminal.	USER	OFF
54	918	Top Level Limit Switch This input function operates only when [A05<4] and [A17=1]. When there is more than one floor after 818 switches upwards then the top floor is informed to the controller by an open 918 input terminal.	USER	OFF
55	DIK	Door inspection key input This input is used to sense opening the shaft door manually. See section 11.2.	USER	OFF
56	CAL	Car call input delay	USER	ON
57	802	Minimum Load Contact If there are no load or person inside the cabin then this input should be ON when used.	USER	ON
58	PNB	Panic Button When this input is ON then the lift travels immediately to the panic floor defined in [B28].	USER	ON

59	DOA	Door Selection Switch for Door 1 This input function can be used when [B18]-TWO DOORS SELECTION = 1 (TERMINAL INPUT). If there are two car doors, which can be opened at the same floor and only door 1 is intended to be opened there then this function can activate. In this case any door open command at this floor will open only door 1. Door 2 will always stay closed even after door open commands.	USER	ON
60	DOB	Door Selection Switch for Door 2 This input function can be used when [B18]-TWO DOORS SELECTION = 1 (TERMINAL INPUT). If there are two car doors, which can be opened at the same floor and only door 2 is intended to be opened there then this function is activated. In this case any door open command at this floor will open only door 2. Door 1 will always stay closed even after door open commands.	USER	ON
61	DPM	Earthquake Alarm Input When this input function is active then the controller enters earthquake mode. The lift will go to the nearest floor when it is in motion. When the lift is in rest then any motion request is prohibited.	USER	OFF
62	SIM	Simulation mode input. See section 12.2 for simulation application.	USER	ON
63	FE1	Photocell Error- door 1 This input should be connected to the error output of the photocell unit employed for the door 1.	USER	ON
64	FE2	Photocell Error- door 2 This input should be connected to the error output of the photocell unit employed for the door 1.	USER	ON
65	DRB	Pit entrance door reset signal	USER	ON
66	ARN	ARN This input is active when AMI-device has been retracted.	USER	ON
67	ARD	ARD This input is active when AMI-device has not been extended.	USER	ON
68	PER	Emergency Phone Error	USER	ON
69	FI1	Special Input 1 FREE OUTPUT-1, in programmable outputs, follows this input. If FI1 is ON then FREE OUTPUT-1 is ON and vice versa. The function of this input is only to transfer one digital output anywhere in the shaft to any other place in the shaft by using intelligent CAN boards in the system.	USER	ON
70	FI2	Special Input 2. It manages FREE OUTPUT-2 in the same way as FI1.	USER	ON
71	FI3	Special Input 3. It manages FREE OUTPUT-2 in the same way as FI1.	USER	ON

72	CDC	Clear All Car Calls If activated (ON) then all pending car calls are cleared.	USER	ON
73	CDH	Clear All Landing Calls / If activated (ON) then all pending hall calls are cleared.	USER	ON
74	CDA	Clear All Present Calls / If activated (ON) then all pending calls (car + halls) are cleared.	USER	ON
75	PAS	If activated it bypasses access control system in COP.	USER	ON
76	FR3	Fire 3 detector. When an active signal is present at this input then the system switches to the fire mode. See section and moves to the fire floor stored in the parameter [B40] FIRE FLOOR 2 When FR1 and FR2 are both active then fire floor is selected as B05 FIRE FLOOR 1.	USER	ON
77	FR4	Fire 4 detector. When an active signal is present at this input then the system switches to the fire mode and moves to the fire floor stored in the parameter [B40] FIRE FLOOR 2 When FR1 and FR2 are both active then fire floor is selected as B05 FIRE FLOOR 1.	USER	ON
78	814	Overload contact (NC). It is inverse function of 804.	USER	OFF
79	MDK	MDK CHECKING It checks if KDK contactors are working synchronously. Active state means a faulty operation and error 4 is evoked.	USER	ON
80	TKF	CHECKING OF TKF CONTACTORS See section 12.1.	USER	ON
81	MRC	MANUEL RESCUE If the car is moved only by opening brakes then MRC input should be activated to monitor car speed. See 8.2.2.	USER	ON

2.6) OUTPUT HARDWARE

All contactor and programmable outputs are 100% galvanically isolated from the microcontroller circuit by means of optocouplers as in Figure 2.5a.

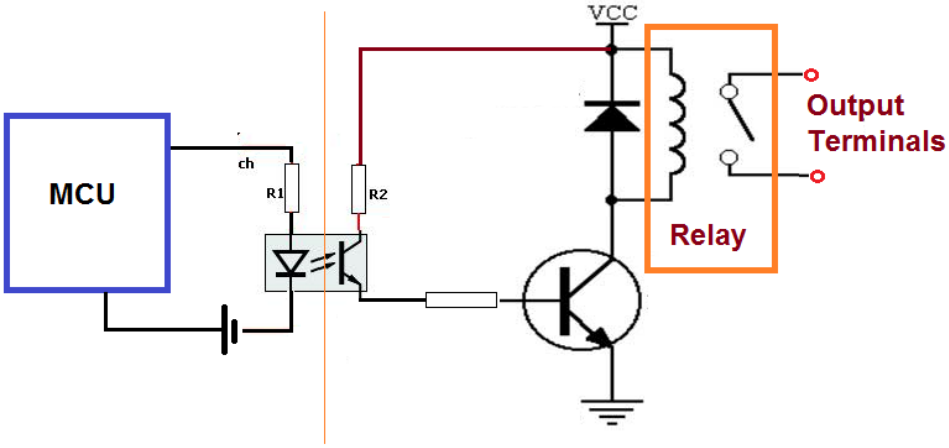

Output Circuit

Figure 2.5a

2.6.1) LOCATION AND SPECIFICATION OF OUTPUTS

AE-MAESTRO Series has 63 programmable outputs. The positions, types and electrical specifications of the outputs are given below.

NO	CODE	LOCATION	CONTACT V/I	CONTACT TYPE
1	S1	ICM	220V/10A	NO
2	S2	ICM	220V/10A	NO
3	S3	ICM	220V/10A	NO
4	S4	ICM	220V/5A	NO
5	S5	ICM	220V/5A	NO
6	S6	ICM	220V/5A	NO
7	V1	SPB/SPT	220V/5A	NO
8	V2	SPB/SPT	220V/5A	NO
7	R1	SCB / PWL	220V/5A	NO
8	R2	SCB / PWL	220V/5A	NO
9	R3	SCB / PWL	220V/5A	NO
10	R4	SCB	220V/5A	NO
11	R5	SCB	220V/5A	NO
12	R6	PWL (OUT)	220V/5A	NO
13	R7	PWL (OUT)	220V/5A	NO
14	R8	PWS	220V/5A	NO
15	E1	SCB (SDE/EOR)	220V/5A	NO
16	E2	SCB (SDE/EOR)	220V/5A	NO
17	E3	SCB (SDE/EOR)	220V/5A	NO
18	E4	SCB (SDE/EOR)	220V/5A	NO
19	E5	SCB (SDE/EOR)	220V/5A	Normalde Açık
20	E6	SCB (SDE/EOR)	220V/5A	Normalde Açık
21	E7	SCB (SDE/EOR)	220V/5A	Normalde Açık
22	E8	SCB (SDE/EOR)	220V/5A	Normalde Açık

Table 2.5a Locations of the output terminals

2.6.2) OUTPUT FUNCTIONS

- There are more than a hundred built-in output functions in software.
- Each output function can be assigned to any output terminal.
- One output function can be assigned to more than one output terminal
- When the condition of the output function is realized then this output is set, namely its contact will be closed.

The output functions in AE-MAESTRO control system are listed below.

Table 2.5b Output Functions

CODE	OUTPUT FUNCTION	EXPLANATION
1	MC Contactor	Main contactor output. MC connects the output of ILC to the motor.
2	BRAKE Contactor	Brake contactor output. Brake contactor energizes the coils of the motor brake.
3	INSPECTION	System is in inspection mode.
4	NORMAL OPERATION	System is in normal mode.
5	FAULT STATE	There is an error in operation.
6	NO ERROR	There is no errors in the system.
7	START	Start of the motion. There is a motion request. System is preparing to start motion. But there is no motion yet.
8	IN MOTION	The car is moving
9	NO MOTION	The car is resting.
10	140 IS ON	140 Terminal is ON
11	140 IS OFF	140 Terminal is OFF.
12	AT DOOR ZONE	The car is at door zone.
13	RESTING IN DOOR ZONE	The car resting at door zone.
14	DIRECTION UP	Motion Direction is up
15	DIRECTION DOWN	Motion Direction is down
16	BUSY ON	System is busy (cabin light is on)
17	NOT BUSY	System is not busy (cabin light is off)
18	120 OFF	120 (stop circuit) is closed.
19	120 ON	120 (stop circuit) is open.
20	PARK TIME	The controller is waiting for park period.
21	LEVELLING	The car is in levelling motion.
22	FIRE ALARM	Fire signal is active. (FR1or FR2)
23	DOWN IN FIRE	Lift is moving downwards in fire
24	UP IN FIRE	Lift is moving upwards in fire
25	FIRE DOOR ALARM	Fire phase is 1 or higher in EN81-72 lift.
26	RETIRING CAM	Retiring cam output
27	OUT OF SERVICE	Lift is not in service.
28	OVERLOAD	Overload signal is active (804 input is active)
29	MAX. START COUNTER	Number of starts exceeded maximum number of starts.
30…35	B0…B5	Binary code outputs. Bits B0…B5.
36	POWER LINE OK	Power line is OK.

37	POWER NOT PRESENT	No voltage in power line inputs.
38	IN RESCUE MODE	The lift is in rescue mode.
39	NOT RESCUE MODE	The lift is not in rescue mode.
40…45	M0…M5	Gray code outputs. Bits M0..M5.
46	VIP TRAVEL – PRIORTY TRAVEL	System is in VIP or priority mode.
47	NEXT DIRECTION UP	Next direction arrow up.
48	NEXT DIRECTION DOWN	Next direction arrow down.
49	LIFTMAN	Liftman
50	FAN	Fan output.
51	HIGH TEMPERATURE	This output is activated if temperature is higher than the value stored in parameter [B29].
52	LOADING BUTTON	Loading period (C39) is activated by LDB input.
53	MC CONTACTOR IS OFF	Motor contactor is not active.
54	NO CALLS	There is (are) registered call(s).
55	SLOW CLOSE -1	When the photocell of the first door is blocked for a longer period than [C34] then the door starts closing in slow motion. This output is for slow closing of door-1.
56	SLOW CLOSE -2	When the photocell of the second door is blocked for a longer period than [C35] then the door starts closing in slow motion. This output is for slow closing of door-2.
57	SPEED GOVERNOR COIL	Output for speed governor coil.
58	CLOSE 1st DOOR	Door close output for door 1.
59	OPEN 1st DOOR	Door open output for door 1.
60	CLOSE 2nd DOOR	Door close output for door 2.
61	OPEN 2nd DOOR	Door open output for door 2.
62	BYPASS WARNING	When the lift is in bypass mode this output is active.
63	SYSTEM IS BLOCKED	If the lift is blocked or put into out of service mode due to an error then this output is active.
64	FIRE NO-ENTRANCE	No-Entrance output
65	GOVERNOR CONTROL	Governor Output symbol
66	AMI-100 COIL	Amı-100 device coil output (for EN81-21)
67	CAR INSPECTION	In inspection mode due to car inspection switch
68	PIT INSPECTION	In inspection mode due to pit inspection switch
69	INSPECTION CAR+PIT	Inspection switches of car and pit are both active simultaneously.
70	DOOR RESET COIL	Door reset device coil output (for EN81-21)
71	FREE OUTPUT 1	It’s active when free input 1 (69) is active
72	FREE OUTPUT 2	It’s active when free input 2 (70) is active
73	FREE OUTPUT 3	It’s active when free input 3 (71) is active
74	ALARM FILTER	It will be active in normal travel and when the doors are open at door zone. This output is used to prevent unnecessary use of EN81-28 emergency phone.
75	TKF CONTACTOR COIL	TKF contactor coil is driven. See section 12.1.
76	MAX.DIRECTION CHANGE	Max direction change counter has exceeded the value in H12.

CHAPTER 3 – BASIC APPLICATIONS

3.1) MOTOR CONNECTION CIRCUIT

3.1.1) Connecting Motor through Power Contactors

The classical drive motor connections are shown in Figure 3.1a You can use this method by disabling STO function. K1 and K2 are power contactors and should be rated to the motor current. Adjust parameter [A26=0].

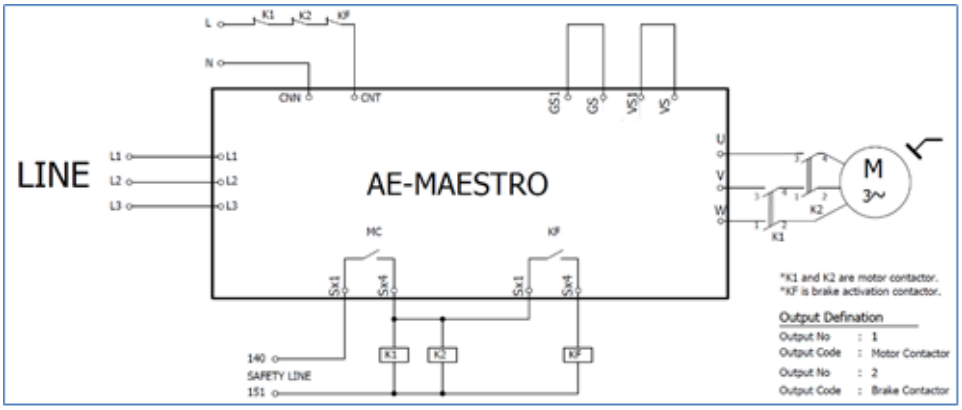

Figure 3.1a

3.1.2) Contactor-less Operation (STO)

AE-MAESTRO can be connected without contactors directly to the motor windings (Safe Torque Off - STO). In this case safety relays or mini contactors are used to enable the device. If contactor-less application is selected then the STO parameter should be set to 1. Select [A21=1]. It should be noted that only power contactors are not present in STO application but brake contactors remain in the controller.

3.1.2.1) STO with Mini Contactors or Safety Relays

First way is using mini contactors complying the standard EN 60947-5-1:2004 or safety relay complying the standard EN50205 in enable circuit. Related circuit is shown in Figure 3.1b.

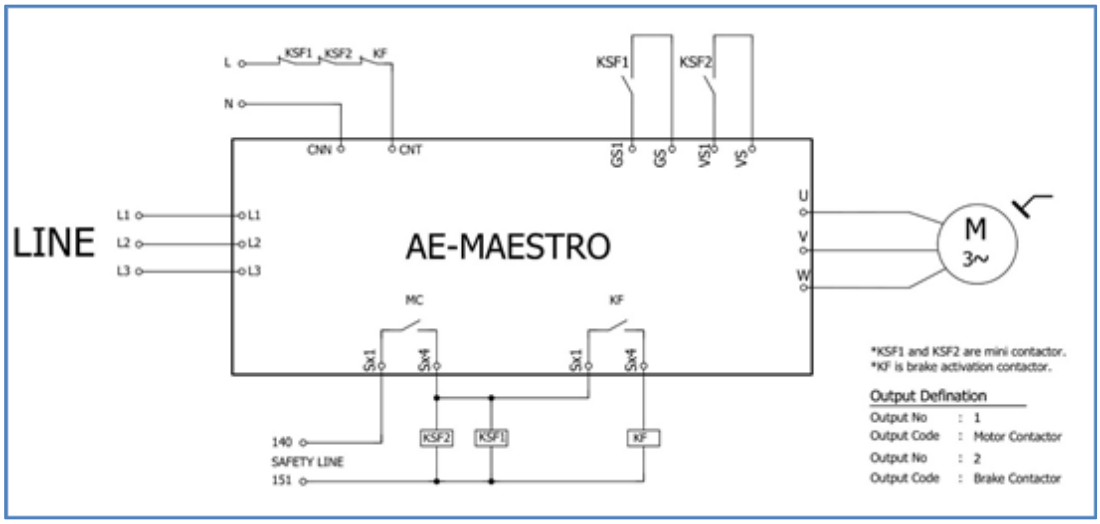

Figure 3.1b

3.1.2.2) STO with SER Board

Second way is using SER board. It includes safety relays and related circuit in it.

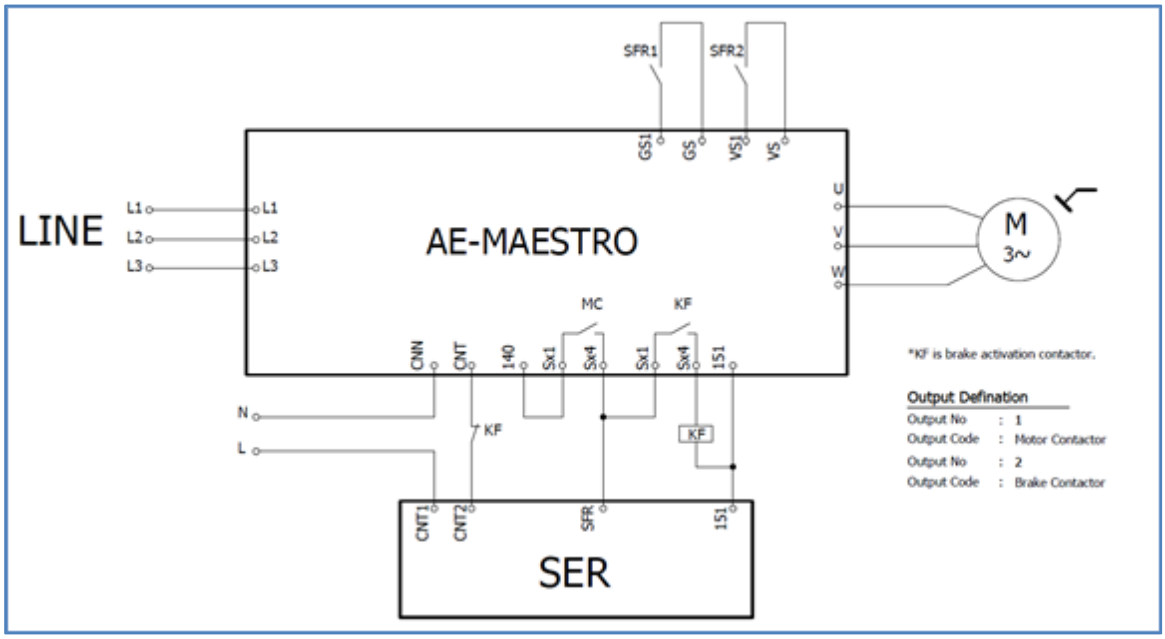

Figure 3.1c

3.2) COLLECTING CAR POSITION INFORMATION

ILC can use magnetic switches or encoder to collect car position information. When encoder method is selected then distance dependent travel system is automatically activated. In this case all speed switching points are calculated by the device. Nevertheless, ILC supports simple switching method by magnetic switches when there is no encoder used in the system.

In all methods 817 and 818 switches are employed to check shaft limits. These are bi-stable magnetic or mechanical switches. They must be open at top (818) and bottom (817) limits paths and closed between these limits. These switches are used as reference point for top and bottom floors in all methods except absolute encoder. Secondly, they force the lift slow down at the shaft limits if the car position system fails. Furthermore, the consistency of the car position data is always checked at these limit points.
In all methods some magnetic switches are used. Define these detector switches in any input terminals **directly on AE-MAESTRO** (I1..I8), not on other boards connected to ILC via CAN-bus to achieve stopping accuracy.

3.2.1) Magnetic Switches as Floor Selector

If magnetic switches are use as floor selector…

- Counter method is used and a reset travel is required after each powering up.
- Distance based operation is **not** active.

3.2.1.1) Counter Mono-stable Switch

In this mode, ML1, ML2, MKD and MKU normally open (KPM206) magnet switches are used and releveling is allowed. Select [A05=0].

3.2.1.2) Counter Bi-Stable Switch

In this mode M0 and MK Bi-stable magnet switches (KPM205) are used and releveling is **not** allowed. Select [A05=1].

3.2.2) Encoders as Floor Selector

When encoders are used to collect car position data you will get mm level accuracy and distance dependent travel facility will be active. You should first complete a learn travel as explained in section 5.1.1 successfully. Then you should adjust floor levels one by one accurately before switching to normal mode as explained in section 5.1.2.

3.2.2.1) Motor Encoder

In this mode a reset travel is required after each powering up. It uses motor encoder which is used for speed feedback. To select this method, select [A05=2]. No additional hardware is needed. This option is not available in asynchronous open loop motor, where [A03=0].

a) **With Relevelling**: In this mode, ML1, ML2, MKD and MKU normally open (KPM206) magnet switches are used. To allow relevelling select [A11=0].
b) **Without Relevelling**: In this mode, only ML1 and ML2 normally open (KPM206) magnet switches are used and releveling is **not** allowed.

3.2.2.2) Shaft Encoder

In this mode a reset travel is required after each powering up. This method uses a standalone shaft encoder fixed to the car with a rope. The encoder turns when the car moves. You should plug an **ENC** encoder interface board into the device. In this method relevelling is allowed and select to use encoder pulses to start and stop relevelling motion. Select [A05=3] for shaft encoder and set [A11=1], if relevelling is requested.

3.2.2.3) ABSOLUTE ENCODER

The best way to get car position information is using an absolute encoder. An absolute encoder always gives the exact car position information to the controller. It does not need resetting after a start-up. An absolute encoder in AE-MAESTRO is connected via CAN bus. It gives information about car position in mm accuracy. This information helps the controller in managing speed paths, especially in slowing down and stopping. To select this method, select [A05= 4] and set [A11=1], if relevelling is requested.

CHAPTER 4 - PARAMETERS

All information about lift and control system settings and timings are stored in system parameters. These parameters are classified into several groups to make it easy for users. These groups are:

G1-GROUP A PARAMETERS: These parameters are denoted with a prefix letter 'A' as Axx. Main parameters define the type and basic functions of the lift. They can be modified only when the lift is resting.
G2- GROUP B PARAMETERS: These parameters are denoted with a prefix letter 'B' as Bxx. Auxiliary parameters define most of the functions of the lift. They can be modified at any time.
G3-TIMER PARAMETERS: These parameters are denoted with a prefix letter 'C' as Cxx. Timer parameters store all of the user definable timer settings. They can be modified at any time.
G4-SPEED PARAMETERS: This section contains parameters for speed adjustments. They can be modified only when the lift is resting.
G5-CONTROL PARAMETERS: Control parameters are mainly the parameters which are used to control the behaviour of the motor. They can be modified only when the lift is resting.
GP6-MOTOR PARAMETERS: This section has parameters on motor and encoder specifications. They can be modified only when the lift is resting.
G7-HARDWARE PARAMETERS: These parameters store the settings for the hardware of the device.

4.1) G1-MAIN PARAMETERS

The lift must be resting to do any modification on main parameters.

[A01] NUMBER OF STOPS

2…64	This parameter stores the number of stops of the lift.

[A02] TRAFIC SYSTEM

0	<u>Simple Collective</u> Car and hall calls are processed together. Collective operation is allowed but there is no difference between hall and car calls. No group operation is allowed.
1	<u>Up Collective</u> Car and hall call buttons are processed separately. Car calls are collective in both directions where hall calls are collective only in upwards motion. This configuration is useful in residential buildings where the main entrance is in top floor. Group operation is allowed.
2	<u>Down Collective</u> Car and hall call buttons are processed separately. Car calls are collective in both directions where hall calls are collective only in downwards motion. This configuration is useful in residential buildings where the main entrance is in the base floor. Group operation is allowed.
3	<u>Full Collective</u> Car, up and down hall buttons are processed separately. This is the most advanced command system and the best selection for group operations.

[A03] MOTOR TYPE

This parameter should be set according to the motor type of the lift.

0	Asynchronous Open Loop Asynchronous motor in open loop (without encoder)
1	Asynchronous Close Loop Asynchronous motor in closed loop (with encoder)
2	Synchronous Gearless Machine with synchronous motor.

[A04] DOOR TYPE

1	Semi Automatic Door The lift has semi-automatic landing doors.
2	Automatic Door The lift has full-automatic landing doors.

[A05] FLOOR SELECTOR

See section 3.2 for a detailed explanation about floor selectors.

0	Counter Mono-stable Switch Monostable magnet switches are used for car position detection.
1	Counter Bi-Stable Switch Bi-stable magnet switches are used for car position detection.
2	Motor Encoder Motor encoder is used for car position detection. See section 5.1 before use.
3	Shaft Encoder Shaft encoder is used for car position detection. See section 5.1 before use
4	Absolute Encoder 2M Absolute encoder LIMAX 2M is used for car position detection. See section 5.1 before use
5	Absolute Encoder LIMAX33CP Absolute encoder LIMAX33CP is used for car position detection. See section 5.1 before use

[A06] DOOR BRIDGING

0	Not Active Neither relevelling nor early door opening are used.
1	Relevelling Relevelling is active. Early door opening is not used.
2	Early Door Open Relevelling is passive. Early door opening is active.
3	Relevel + Early Door Open Both relevelling and early door opening are active.

[A07] GROUP NUMBER

0	Simplex The lift works as simplex.
1…8	Group Number The lift works in a group of lifts. A07 specifies its group number.

[A08] NUMBER OF DOORS IN CABIN

1	1 Door There is only one car door.
2	2 Doors There are two car doors.

[A09] COMMUNICATION

0	Car Serial The communication between car and controller is serial. The landing calls and signals are driven as parallel by ALPK board.
1	Full Serial The communication between car, landing panels and controller is full serial.

[A10] LIFT STANDARD

The device changes behaviour especially after errors and in starting motion depending on the lift standard selected in this parameter. Wiring, parameters and peripheral devices must be in conformity with the standard selected here, otherwise you will face with errors or blocking states.

0	EN81-1/2 The device works in conformity with EN81-1 standard.
1	EN81-1/2+A3 The device works in conformity with EN81-1+A3 standard.
2	EN81-20/50 The device works in conformity with EN20/50 standard.

[A11] LEVEL DETECTOR

Level detector should be determined if relevelling is selected (A06=1 or A06=3).

0	MKU/MKD Levelling motion is started by the positions of MKU and MKD switches. When the car is resting at the floor level MKD and MKU are both closed (ON). If the car moves in any direction then one of these switches will be open (OFF). This will initiate a relevelling motion. This option is present to be used when motor encoder is used as car position detector [A05=2] and
1	ENCODER Levelling motion is initiated regarding to the current car position. This option should be selected when shaft encoder or absolute encoder is used.

[A12] ENTRANCE FLOOR

0…8	This parameter stores the number of floor(s) below entrance floor if they exist. Otherwise set it to 0.

[A13] LIFT/HOMELIFT

0	Normal Lift The lift serves as a normal lift in conformity to the standard EN81-20/50.
1	Homelift The lift performs as a **homelift**. In this selection the traffic system is simple push button. When any travel is started and by using car buttons then the motion continues only if the car call button is kept pressed along the travel. If the car call button is released during travel, then the motion is stopped immediately. However, there is no such restriction for hall calls. The lift travels to any hall call as in a normal lift.

[A14] FIRE STANDARD

This parameter determines the behaviour of the lift in case of fire. See section chapter 9.

0	EN81-73
1	EN81-72 Fire fighter Lift
2	EN81-72 Fire fighter Lift with car fireman switch
3	EN81-72 Fire fighter Lift RUSSIAN STANDARD
4	EN81-72 Fire fighter Lift with blocking after operation

[A15] INSTALATION MODE

This parameter has been implemented to facilitate the first installation of the system. System must be inspection mode due to inspection box or RECALL switches to activate this utility. Some of the inputs are inhibited when this utility is active. When the controller returns to the normal mode or system is switched on then this parameter is switched to passive [A15=0] automatically.

0	Passive System works in normal mode.
1	Active If the system is in the inspection mode due to RECALL or car top switch, then the controller does not respond 871, DIK, BYP, KRR, DPM, SGO, KL1, KL2, K1C and K2C inputs. Pit inspection, UCM errors and bypass procedures are skipped.

[A16] UCM CONTROLLER

This parameter controls the presence of the UCM control system. You should care with the wiring and correct setting of the parameters related UCM devices. UCM system is passive if [A10=0].

0	Not Active No Unintended Car Motion detection is carried out.
1	Active Unintended Car Motion system is active.

[A17] RESETTING SWITCH

This parameter defines the presence of resetting switches in place of 917 and 918 if there is more than one floor in the compulsory slow down region.

0	Not Activated 817 and 818 are used as resetting switches for all floor selector types, where A05 is less than 4.
1	Activated If there are more than one floor below 817/KSR1 or above 818/KSR2, then the system uses the input functions 917 for bottom resetting switch and 918 for top resetting switch. 817 and 818 continue to serve as speed limit switches.

[A18] PIT CONTROLLER BOARD SPB/SPT

This parameter controls the presence of the pit board.

0	NOT USED There is no SPT or SPB board in shaft-pit.
1	PRESENT SPT or SPB boards is used in shaft pit.

[A19] SIMULATOR MODE

0	Not Active Simulation mode is not active.
1	Active Do not select this option in normal lift. When this parameter has been selected then the system simulates car position inputs and encoder signal. This mode is not to be used in lift shaft. It is only to run the device without motor. It can be used only for testing or teaching the features of the device or the controller system. The system enters into simulator mode after setting the SIM input to 1. See section 12.2.

[A20] DOOR ZONE

150…600	This parameter stores the door zone length. It defines the region where the doors are allowed to be opened.

[A21] RELEVEL START mm

15…30	Relevelling starting point measured from the floor level. The controller initiates relevelling motion when the lift moves beyond the distance defined in this parameter.

[A22] RELEVEL STOP mm

3..15	Relevelling stopping point measured from the floor level. The controller terminates relevelling motion when the lift moves beyond the distance defined in this parameter.

[A23] EMERGENCY RESCUE OPERATION ALLOWED

0	Passive Emergency rescue operation is inhibited.
1	Active When the line fails the device enters into rescue mode and initiates the rescue operation.

[A24] EKS VOLTAGE

This parameter stores the motor voltage supplied to the device in case of rescue operation.

0	220V AC
1	380V AC
2	110V AC
3	60V DC
4	48V DC

[A25] HIGH SPEED SWITCHES

This parameter stores the information the presence of HU and HD switches for high speed applications.

0	Passive
1	Active

[A26] STO-NO CONTACTORS

This parameter must be set in accordance with usage of power contactors.

0	Passive STO functions are **not** used. The device is connected to the motor through power contactors in classical way, as in wiring diagram in Figure 3.1a.
1	Active STO functions are used. The device is connected to the motor without any contactors. The wiring of the system must be either as in Figure 3.1b or Figure 3.1c.

4.2) G2-B PARAMETERS

[B01] AFTER LOCK FAULT

0	Continue The system continues its operation after any lock fault.
1	Block at Repeated The system will be blocked after a certain number of repeated lock faults. This number is the value defined in parameter [B05].
2	Clear Registers All call registers are cleared after any lock fault.
3	Block + Try Again The system will be blocked after a certain number of repeated lock faults. This number is the value set in parameter [B05]. However, the system returns to its normal operation automatically after 5 minutes.

[B02] CONTINUE ON ERROR

0	No The system stops after all errors.
1	Yes The system continues its operation after some simple errors, which are not related to the safety circuit or car motion.

[B03] ERROR BLOCK

0	The system will be blocked. The system will be blocked for some simple errors.
1	The system will not be blocked. The system will not be blocked for some simple errors.

[B04] UCM ERROR BLOCK

This parameter determines whether the system is going to be blocked after the occurrence of any UCM related errors (Errors with the error number 64, 68, 69 and 72).

0	CAN BE BLOCKED UCM Errors will block the lift.
1	NO BLOCKING UCM Errors will **not** block the lift. **Warning: This option can be used only for installation, repair and maintenance purposes. This parameter cannot be set to 0 for normal operation according to the current lift standards.**

[B05] MAXIMUM ERROR REPEAT

3..50	When any error with the error codes: 6, 12, 13, 27, 61, 62, 70, 28, 44, 38, 88, 89, 91, 41, 65, 82, 66,67, 50, 73, 74 and 75 occurs and is repeated as many times as the number defined in this parameter then the system will be blocked.

[B06] PARK SYSTEM

This parameter determines whether the park floor is present or not and its behaviour at the park floor.

0	No Park Floor No park floor is defined.
1	Park Floor Door Close The car will go to the parking floor set in parameter [B07] when no calls have been received in a specified time period [T02] after the car light goes off. The car will wait at parking floor [B07] with **closed** doors.
2	Park Floor Door Open The car will go to the parking floor set in parameter [B07] when no calls have been received in a specified time period [T02] after the car light goes off. The car will wait at parking floor [B07] floor with **open** doors. **Warning: This option is not in conformity with EN81-20/50 as well as EN81-1.**

[B07] PARK FLOOR

0…63	This parameter defines the parking floor where the car will go and wait if parking has been activated.

[B08] HALL CALLS INHIBIT

You can inhibit hall calls by using this parameter.

0	Hall Calls Allowed
1	Hall Calls Inhibited

[B09] MAXIMUM CABIN CALLS

1…63	This parameter sets the maximum number of accepted car calls at any time. Any new car calls will not be executed if there are already [B09] car calls.

[B10] DOORS IN STOP BREAK

0	Doors Passive If stop circuit (120) is off at floor level then door signals are passive, neither open nor close commands are applied to the doors.
1	Doors Active Door signals are active after a stop break.

[B11] TWO DOORS SELECTION

0	TOGETHER ACTING When there are two car doors then the opening floors for each door is specified in Floor Parameters section (K1 and K2). Each door opens according to the settings in floor parameters.
1	SEPERATLY ACTING The door to be opened at each floor is determined not by the settings in floor parameters but according to the states of the programmable inputs, DOA and DOB. Car door A is allowed to open if DOA input is active. Similarly, Car door B is active if DOB input is active. DOA and DOB cannot be active (ON) at any time simultaneously.

[B12] BOTTOM FLOOR (GROUP LIFT)

0…5	This parameter is used only for group operations. If there are one or more floors of the other lifts in the group below the base floor of this lift then the number of missing floors downwards must be defined in this parameter. This information is used in adapting the floor levels in group communication.

[B13] DOOR LIMIT SWITCHES

0	NORMALLY OPEN AL1, AL2, KL1, KL2 inputs will be active when their terminals connected to 1000.
1	NORMALLY CLOSED AL1, AL2, KL1, KL2 inputs will be active when their terminals are left open.

[B14] FIRE FLOOR 1

0…63	When the input terminal assigned to the input function **FR1** is activated then the car immediately moves to the floor defined in this parameter. See Chapter 8.

[B15] FIRE FLOOR 2

0…63	When the input terminal assigned to the input function **FR2** is activated then the car immediately moves to the floor defined in this parameter. See Chapter 8.

[B16] PTC CONTROL

0	PTC Control Off Motor thermistor control is not active.
1	PTC Control On Motor thermistor control is active.

[B17] PHOTOCELL BYPASS CONTROL

0	<u>İnactive</u> No photocell bypass operation is carried out.
1	<u>ACTIVE-1</u> Photocell bypass operation is carried out. Only SLOW CLOSE output function is available for door operator to close the door in photocell bypass operation. See also timer parameters [T34] and [T35].
2	<u>ACTIVE-2</u> Photocell bypass operation is carried out. Door close command is sent together with SLOW CLOSE output function to door operator to close the door in photocell bypass operation. See also timer parameters [T34] and [T35].

[B18] GONG CONTROL

This parameter defines how the arrival gong is executed.

0	<u>Gong at Stop</u> Gong signal is activated when the lift stops.
1	<u>Gong at Slow Speed</u> Gong signal is activated when the lift starts to slow down.
2	<u>No Car Gong</u> There is no arrival gong.

[B19] MK DELAY

0…50	This parameter is used when floor selector is not encoder (A05<2). It defines the delay in stopping after the stop magnet switch has been read by the system **in normal operation**. One unit in this parameter corresponds to a time delay of 10 msec. Setting to 0 disables this function. Max. value 50 corresponds to 0,5 sec. delay.

[B20] ERS MK DELAY

0…50	It defines the delay in stopping after the stop magnet switch has been read by the system **in rescue mode**. One unit in this parameter corresponds to a time delay of 10 msec. Parameter unit is 10 msec. Setting to 0 disables this function. Maximum value of 120 corresponds to 1,2 sec. delay.

[B21] ID CONTROL

This parameter defines how the ID control system will function. In order to activate ID control system this parameter should be nonzero. ID control system is explained in detail in section 5.3. This parameter must be 0 during operation of priority control. However, before starting priority operation control define [B21=2] to introduce the keys to the system. Once all keys have been introduced then define [B21=0] to start priority control operation.

0	Not Used ID control system is inactive. No ID cards can be read by the system.
1	Cabin ID control system is active. ID keys can be read only in cabin.
2	Cabin + Controller ID control system is active. ID keys can be read in cabin and in controller.
3	Cabin+Controller+RS232 ID control system is active. ID keys can be read in cabin, in the controller.
4	PASSWORD +PAS INPUT Calls are confirmed by PASSWORD. If correct password is given PAS input is activated and call is accepted.

[B22] VIP CONTROL

This parameter switches on and VIP control system.

0	Not Active VIP control system is not active.
1	Active VIP control system is active

[B23] 1st VIP FLOOR

0…63	When the input terminal assigned to VP1 input function is activated then the lift immediately moves to the floor set in this parameter. VP1 has highest priority and VP2 is the next one in VIP system. If VP2 or VP3 is active while VP1 too is active then VP1 is selected and VP2 and VP2 are ignored.

[B24] 2nd VIP FLOOR

0…63	When the input terminal assigned to the VP2 input function is activated then the lift immediately moves to the floor set in this parameter. VP1 has highest priority and VP3 the lowest. If VP2 and VP3 are both active then VP2 is selected and VP3 is ignored. And when VP1 is active V2P is ignored.

[B25] 3th VIP FLOOR

0…63	When the input terminal assigned to the VP3 input function is activated then the lift immediately moves to the floor set in this parameter. VP3 has the lowest priority. Therefore, if VP2 or VP1 are active then VP3 is ignored.

[B26] WAIT DOOR OPEN

This parameter determines how the doors behave at floor level while resting.

0	Wait Closed Door Car waits with **closed** doors at floor level.
1	Wait Open Door Car waits with **open** doors at floor level. **Warning: This option is not in conformity with EN81-20/50 as well as with EN81-1.**

[B27] THERMOMETER

This parameter determines how the machine room temperature information is collected.

0	No Temp. Control Machine room temperature will not be carried out.
1	THR Input An external temperature detector is used in processing machine room temperature. Any active state (ON) in the input terminal assigned to the function THR indicates that the temperature is out of the allowed temperature limits for machine room and therefore any motion is prohibited.

[B28] PANIC FLOOR

0…63	When **panic input** has been activated then the lift cancels current calls and travels to the panic floor. Panic floor is defined in this parameter.

[B29] AMI-100 DEVICE

This parameter defines the AMI-100 device for EN81-21

0	Not Used
1	Used

[B30] CAR DISPLAY OUTPUT

This parameter defines how the digital outputs in car controller SCB board are driven.

0	7 Segment Display Digital outputs are 7 segment display data.
1	Grey Code Output Digital display outputs on SCB board give Grey Code output where the digit G represents G0, digit F represents G1, digit E represents G2 and digit D represents G3.
2	Binary Code Output Digital display outputs on SCB board give Binary Code output where digit G represents B0, digit F represents B1, digit E represents B2 and digit D represents B3.
3	7 Segment + Arrows Digital outputs are 7 segment display data and direction arrows.

[B31] HALL DISPLAY OUTPUT

0	7 Segment Display Digital outputs are 7 segment display data.
1	Grey Code Output Digital display outputs ALPK board give Grey Code output where digit G represents G0, digit F represents G1, digit E represents G2 and digit D represents G3.
2	Binary Code Output Digital display outputs on ALPK board give Binary Code output where digit G represents B0, digit F represents B1, digit E represents B2 and digit D represents B3.
3	At Floor Level Signal Digital display outputs on ALPK board give floor number outputs such as A-701, B-702...G-707, 2G-708, 2BC-709. For example, if the car is at floor 2 then only B segment (702) will give an output where all other segments will be inactive.

[B32] CNT CHECKING

This parameter defines the way contactors are checked.

0	Checking Off No contactor checking is carried out. **Warning: This option can be used only for installation, repair and maintenance purposes. This parameter is not allowed to be set 0 for normal operation according to the current lift standards.**
1	Checking On Contactor checking is always carried out.

[B33] DOOR BUTTONS

0	Separately Door open and door close buttons of two car doors function separately. In order to do this, there must be two car panels in the cabin.
1	Together Door open and door close buttons of two car doors function together. There is only one car operating panel in the cabin for the two car doors.

[B34] RESERVED

[B35] RESETTING INHIBIT

This parameter determines if a resetting travel is started after a power start-up.

0	Passive The lift will not start to travel to reset the counting system after any start-up.
1	Active When the lift is switched on then the lift travels the base (or top) floor to reset floor counting system where the floor selector is not absolute encoder, namely [A05]<3.

[B36] BLOCKING INHIBIT AT SLOW MOTION PERIOD

0	Can Be Blocked If system does not reach the target floor in a specified parameter on [T05], this parameter blocks the system.
1	No Blocking This parameter doesn't block the system after finished the specified timer [T05].

[B37] MOTION IN INSPECTION

This parameter determines the limits of the inspection travel in the shaft limits.

0	Stop At 817 / 818 The motion in inspection stops upwards at 818 and downwards at 817. Beyond these limit switches no inspection motion is allowed.
1	To the Last Floor Inspection motion can continue until last floor levels upwards and downwards.

[B38] DOOR OPEN CHECK

This parameter determines the method of the door open check.

0	Check Always Door open check is always carried out when a door open command is executed.
1	At First Opening Door open check is carried out once at the first opening after reaching a new floor. If it is passed then no check is carried out at this floor any more. If not passed the system will be blocked.
2	No Door Open Check No door open check is carried out. **Warning: This option is not in conformity with EN81-20/50.**

[B39] NUMBER OF FIRE DOOR

1…2	This parameter defines the number of car doors in fire-fighter lift (EN81-72).

[B40] FIRE SWITCH

See chapter 9.

0	Fire alarm is activated if the input FRx is low (connected to Node 1000).
1	Fire alarm is activated if the input FRx is high (connected to Node 100).

[B41] DOORS IN FIRE

This parameter determines the door status at fire while the car rests at fire exit floor if EN81-73 is selected [A14=0]. See chapter 9.

0	Doors wait open at fire exit.
1	Doors wait closed at fşre exit.

[B42] FIRE FLOOR 3

0..63	When the input terminal assigned to the input function **FR3** is activated then the car immediately moves to the floor defined in B42. See Chapter 8.

[B43] FIRE FLOOR 4

0..63	When the input terminal assigned to the input function **FR4** is activated then the car immediately moves to the floor defined in B43. See Chapter 8.

[B44] EMERG.PHONE BUTTON

This parameter defines the button used to activate emergency phone.

0	Emergency phone is activated when INTERCOM BUTTON being pressed for 5 seconds.
1	Emergency phone is activated when ALARM BUTTON being pressed for 5 seconds.

4.3) G3-TIMER PARAMETERS

In all t type parameters (timings), one unit corresponds to 0.1 sec.

[T01] BUSY PERIOD

30…3000	Busy period during which cabin light and Busy output (16) are activated.

[T02] PARK WAIT PERIOD

50…10000	If the parking function has been defined in parameter [B06] (1 or 2) then the lift starts to travel to the parking floor specified in parameter [B07] when no calls have been received after the last travel for the time period specified in this parameter.

[T03] WAIT IN FLOOR

20…1000	This parameter defines the time period for the car to wait before departing for the next call in collective systems.

[T04] RESERVED

[T05] FLOOR PASS PERIOD

50…3000	This parameter defines the maximum time interval in which the lift travels from one floor to the next one. If this interval is exceeded an error signal (6) is created.

[T06] OPEN WAIT PERIOD-1

30…1000	After a door-1 open command the door will wait for the period defined in this parameter to close back.

[T07] WAIT FOR START

0…3	After executing a motion command, the device activates the contactors and waits for the period defined in this parameter for the contacts of the contactors to settle down. At the end of this period, motor driver is enabled.

[T08] BRAKE DELAY AT START

0,2…5	The brake coils are activated after a time delay when the device has been enabled. This parameter defines this delay.

[T09] ZERO SPEE PERIOD

0,2…5	Zero Speed period is present only in closed loop systems. As soon as the device has been enabled after a motion command zero speed operation is started to hold the motor shaft stationary. This period starts with T08 simultaneously. After [T08] period brakes are opened. Therefore [T08] must be smaller than [T09].

[T10] START SPEED RAMP PERIOD

0,2…5	When a motion command is received then the speed is increased up to the start speed [S01] in a time period defined in this parameter. This parameter has no effect if [S09] parameter is set to 0.

[T11] START SPEED WAIT PERIOD

0,2…5	This parameter defines how long the driver will hold the car at the starting speed [S01]. At the end of this period, the motor driver starts to accelerate up to its command speed. This parameter has no effect if [S09] parameter is set to 0.

[T12] DC BRAKE PERIOD

0,2…5	When the speed is lower or equal to the stopping speed [S18] in deceleration phase then either Zero Speed (in closed loop systems) or DC Braking (in open loop systems) is activated to hold the motor stationary. Active DC Braking or Zero Speed period is the sum of [T12] + [T13]. It means that the timer related to this parameter counts down after [T13] period has been diminished.

[T13] BRAKE HOLD DELAY AT STOP

0,2…5	When the speed is lower or equal to the stopping speed [S18] in deceleration phase the time, period defined in this parameter is initialized and at the end of this period brakes are closed. After this point DC Braking or Zero Speed starts to count down and terminates after [T12] period.

[T14] BRAKE HOLD DELAY AT STOP

0,2…5	The contactors are de-activated after a time delay when the device has completed its travel and motor output is disabled. This parameter defines this delay.

[T15] DTS BUTTON DELAY-1

0	Disabled
20…500	DTS (Door close button) is inhibited during the period defined in this parameter after arrival at the floor.

[T16] RESCUE STARTUP DELAY

1…999	The starting delay of rescue operation after a power failure or phase failure.

[T17] DELAY AFTER DOOR

0…7	Time delay to activate door closer after the door contact becomes ON in semi-automatic door.

[T18] K20 PERIOD

10…200	When K20 input function is activated then door-1 will open. Then it will wait for the time period specified in this parameter before closing back.

[T19] PHOTOCELL PERIOD-1

10…200	When FOT input function is activated then door-1 will open. Then it will wait for the time period specified in this parameter before closing back.

[T20] DOOR OPEN PERIOD 1

5…100	This parameter defines the time period for door-1 to open. The controller checks if the door-1 is open (or more accurately, not closed anymore) within this period after a door-1 open command.

[T21] DOOR LOCK WAIT PERIOD-1

30…1000	After a door-1 close command has been executed then the controller waits for a time period defined in this parameter for door-1 to be closed. If door-1 is not closed within this time period then an error (8) will be created.

[T22] OPEN WAIT PERIOD-2

30…1000	After a door-2 open command the door will wait for the period defined in this parameter before closing back.

[T23] K22 PERIOD

10…200	When K22 input function is activated then door-2 will open. Then it will wait for the time period specified in this parameter before closing back.

[T24] PHOTOCELL PERIOD 2

10…200	When FT2 input function is activated continuously for the time period defined in this parameter then door-2 switches to slow close-2 mode and activates slow closing-2 for the door-2 provided that other than 0 is selected in parameter B17.

[T25] DOOR OPEN PERIOD-2

5…100	This parameter defines the time period for door-2 to open. The controller checks if the door-2 is open (or more accurately, not closed anymore) within this period after a door-2 open command.

[T26] DOOR LOCK WAIT PERIOD-2

30…1000	After a door-2 close command has been executed then the controller waits for a time period defined in this parameter for door-2 to be closed. If door-2 is not closed within this time period then an error (8) will be created.

[T27] DOOR LOCK WAIT PERIOD-2

0…500	If the safety line is not closed although the doors are closed. When KL1 and KL2 inputs become ON then the system will evoke error (40) if the safety line will not OK within the time period set in this parameter.

[T28] DTS BUTTON DELAY 2

0	Disabled
20…500	DT2 (Door close button) is inhibited during the period defined in this parameter after arrival at the floor.

[T29] GROUP OPEN DOOR

100…2500	This timer is used only in group operation. If the door of the lift stays open for a time period set in this parameter then its job as slave is terminated and no hall call jobs will be sent to it.

[T30] RESERVED

[T31] SLOW SPEED MAXIMUM PERIOD

50…1000	This parameter stores the maximum travel time allowed to pass when the car is in slow speed. When this time is passed, an error (6) is generated and the system is blocked.

[T32] ERS DOOR WAIT PERIOD

20…400	This parameter defines the time delay to close the door after arrival at the floor on the rescue mode.

[T33] MAXIMUM BUSY PERIOD

0	Inactive
1…3000	If the doors are left open or cannot close for a period of [T01] then the busy signal and cabin lights are switched off until a new call is received.

[T34] PHOTOCELL BYPASS PERIOD 1

50…3000	When FT1 input function is activated continuously for the time period defined in this parameter then door-1 switches to slow close-1 mode and activates slow closing-1 for the door-1 provided that other than 0 is selected in parameter [B17].

[T35] PHOTOCELL BYPASS PERIOD 2

50…3000	When FT2 input function is activated continuously for the time period defined in this parameter then door-2 switches to slow close-2 mode and activates slow closing-2 for the door-2 provided that other than 0 is selected in parameter [B17].

[T36] MAXIMUM RESCUE PERIOD

300…5000	This parameter defines the maximum time period allowed for emergency rescue operation. If the rescue operation is not completed within this period then it will be terminated by the controller.

[T37] INSPECTION EXIT DELAY

10…200	After inspection mode turn off wait period to start motion.

[T38] DIRECTION DELAY

20…300	When the lift arrives at a new floor then its last direction before stopping is kept unchanged within the time interval defined in this parameter.

[T39] LOADING PERIOD

100…5000	When LDB input function (loading button) has been assigned to an input terminal then pressing LDB button holds the doors open within the time period defined in this parameter. The door will not be closed due to a new call. Only DTS and DT2 buttons (door close) can terminate this function.

[T40] ENCODER CONTROL

20…100	When an incremental encoder is used to get car position [A05=2] it is checked by using this timer parameter. If no encoder pulses have been received for a time interval defined in this parameter then an error signal is created (13) and the motion will be stopped.

[T41] PRIORITY PERIOD

200…3000	Priority waiting period. After the lift is called by a priority key and no further call is received for a time period defined in this parameter then the priority operation is cancelled.

[T42] DELAY AFTER DOOR

2…30	This parameter is used for semi-automatic doors and defines the activation delay period of retiring cam after the landing door has been closed.

[T42] RESERVED

4.4) G4-SPEED PARAMETERS

[S01] NOMINAL SPEED (m/s)

0,01 … 5	Maximum allowed travel speed for normal operation.

[S02] RECALL SPEED (m/s)

0,01 … 0,3	The travel speed used in recall operation.

[S03] RELEVELLING SPEED (m/s)

0,01 … 0,3	The travel speed used in releveling.

[S04] INSPECTION NORMAL (m/s)

0,01 … 0.3	The travel speed in inspection operation between high speed limit switches where [817=1] and [818=1].

[S05] INSPECTION SLOW (m/s)

0,01 … 0,3	The travel speed in inspection motion below 817 downwards [817=0] and above 818 upwards [818=0].

[S06] RESCUE SPEED (m/s)

0,01 … 0,3	The travel speed in rescue operation.

[S07] RESETTING TRAVEL SPEED (m/s)

0,01 … 5	The travel speed used in resetting travel.

[S08] CREEPING SPEED (m/s)

0,01 … 0,1	The travel speed used while approaching the floor.

[S09] STARTING SPEED (m/s)

0,01 … 0,15	If this parameter is zero then the device starts its motion from zero. If this parameter is non-zero then the device accelerates in [T10] time period to starting speed at start. Then it waits for the time period [T11] at starting speed. Figure 4.4a Start speed is used mainly in open loop applications where proper control of the motor at very low speeds is nearly impossible due to the lack of feedback loop.

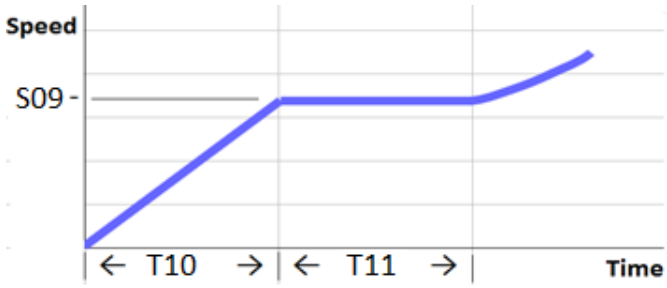

Figure 4.4a Acceleration

[S10] ACCELERATION (m/s²)

0,01…5	Acceleration value of the system. Increasing the value makes the lift reach the target speed in a shorter amount of time.

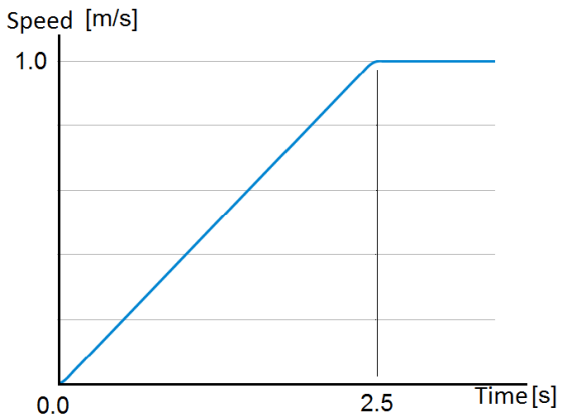

Figure 4.4b [S10] Acceleration

When lift receives higher speed command while stopping or while moving with a constant speed, system increases motion speed gradually to command speed. As seen on Figure 4.4b, speed – time curve is linear. Gradient of line is acceleration (ACC) value. [S10] parameter is set for the acceleration value of the device.

In Figure 4.4b, system receives a 1m/s target speed command while stopping. [S10] value is the time to reach the target speed. Lift reaches target speed in 2.5 seconds, so the acceleration value is:

[S10]= SPEED / TIME = (1,0 m/s) / (2,5 sec) = 0,4 m/s²'.
If acceleration [S10] increases, system reaches target speed in a shorter amount of time.

[S11] S-CURVE IN ACCELERATION START(m/s³)

0,01…3	The increase in acceleration in the S-Curve at the beginning of acceleration. A lower value in this parameter results in a softer start of travel but increases the travel time. A higher value in this parameter results in a faster start of travel and does not increase the travel time significantly.

S-Curve at Starting

Device accelerates with [S10] acceleration value when it receives any speed command higher than current speed. Passengers in the car feel the change of acceleration in this case. In order to avoid such situations, S-curves are employed where a change in acceleration is required.

As seen on Figure 4.4c, acceleration starts from zero and increases slowly up to the desired acceleration [S10] value.

In S-curve region the acceleration is increased gradually, not suddenly. At the end of the S-curve region the device reaches [S10] acceleration value. Lower values of [S11] and [S12] mean soft transition, and such lower values increase total motion time.

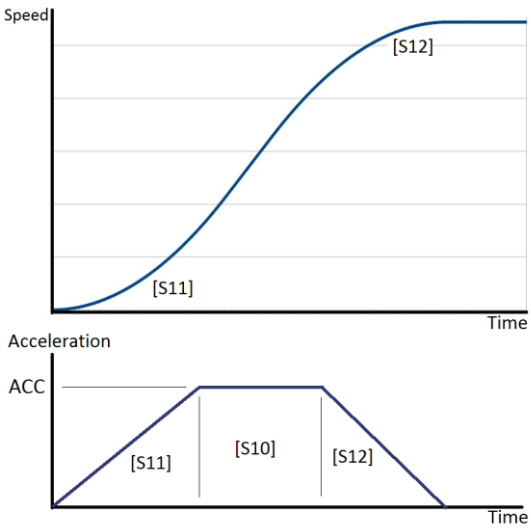

Figure 4.4c Acceleration S-Curve

[

[S12] S-CURVE IN ACCELERATION END(m/s³)

0,01…5	The decrease in acceleration in the S-Curve at the end of acceleration. A lower value in this parameter results in a softer transition at the end of the acceleration path but increases the travel time. A higher value in this parameter results in a faster transition at the end of the acceleration path and does not increase the travel time significantly.

S-Curve at Stopping

Device slows down with [S13] deceleration value when it receives any speed command lower than its current speed. Passengers in the car feel the change of deceleration during this period. In order to avoid such situations, S-curves are employed where a change in deceleration is required.

As seen on Figure 4.4d, deceleration starts from zero and increases gradually to the desired deceleration [S13] value.

In S-curve region the deceleration is increased gradually not suddenly. At the end of the S-curve region the device reaches [S13] acceleration value. Lower values of [S14] and [S15] mean soft transition, and such lower values increase total motion time.

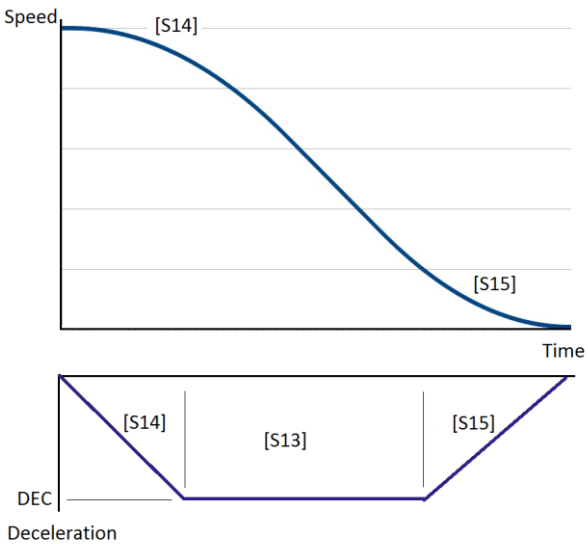

Figure 4.4d Deceleration S-Curve

[S13] DECLARATION (m/s^2)

0,01…5	This parameter defines the deceleration rate. Higher value shortens the slow down path.

[S14] S CURVE IN DECLARATION START(m/s^3)

0,01…5	The increase in deceleration in the S-Curve at the beginning of deceleration. A lower value in this parameter results in a softer start to slowing down but increases the travel time. A higher value in this parameter results in a faster start to slowing down and does not increase the travel time significantly.

[S15] S CURVE IN DECLARATION END(m/s^3)

0,01…5	The decrease in deceleration in the S-Curve at the end of deceleration. A lower value in this parameter results in a softer transition at the end of the deceleration path but increases the travel time. A higher value in this parameter results in a faster transition at the end of the deceleration path and does not increase the travel time significantly.

[S16] DECLARATION MODE

It is recommended to set 1 for asynchronous motors and 0 for synchronous motors.

0	Stop mode for synchronous motor.
1	Stop mode for asynchronous motor.
2	Faster stop mode for synchronous motor.
3	Faster stop mode for asynchronous motor.
4	Declining torque

[S17] STOP SPEED (m/s)

0,01 … 0,1	When the speed is below the value defined in this parameter during a travel while the car is approaching the floor in slow down phase then the device accepts this as stop command. You should also define the method for detecting stop speed in parameter [S18] properly.

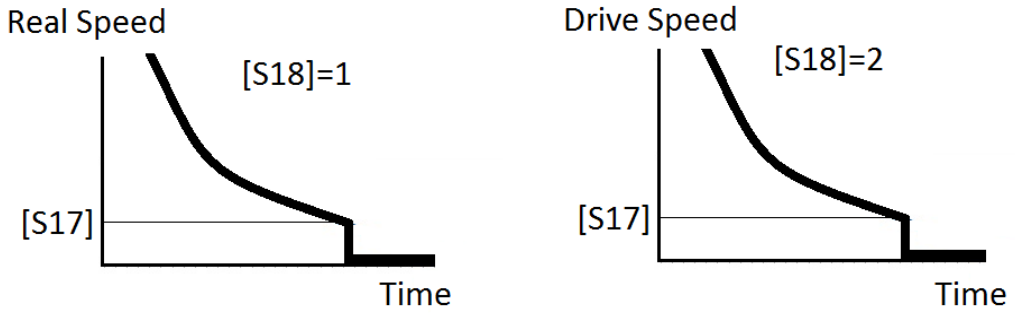

Figure 4.4f Stopping

[S18] STOP SPEED REFERENCE

The inverter shuts down its output when the travel speed is lower than [S18] stop speed as shown in Figure 4.4f. Actual speed is the speed read by the encoder, and drive speed represents the speed calculated by the device for output. If no feedback loop is present (open loop) then actual speed may differ from drive value speed.

The detection system of the stop speed [S18] is references by regarding the selection for this parameter.

1	Real Speed Reference speed read by the encoder. Preferred in closed loop applications.
2	Drive Speed Reference speed is the speed calculated by the device. It may differ from actual speed. However, it is advised to use this method in open loop applications.

[S19] START MODE

This parameter is used only for synchronous motors and offers two extra control functions for zero speed control. The default value is recommended as 2.

0	Passive Inactive. Zero Speed Control is performed without any additional control of this parameter.
1	Smart If a movement in travel direction is detected during zero speed operation in start then zero speed operation is terminated immediately and acceleration will start.
2	Fast Encoder reading period is increased internally to fasten the response time to any movement in any direction.
3	Fast+Smart In this selection both of the controls in items 1 and 2 are involved. The response time to any movement gets faster as well as the inverter switches directly to the acceleration curve when any movement is in travel direction is detected.
4	Pre-Torque Zero speed control is performed with pre-torque

[S20] STOPPING DECELERATION

0,1… 1	This parameter defines the deceleration rate when the car gets stop command while travelling at creeping speed.

[S21] STOPPING DECELERATION START S-CURVE

0,1 … 1	This parameter defines S-curve rate to reach the deceleration in S20, when the car gets stop command while travelling at creeping speed.

[S22] CREEPING PATH

0…500	This parameter defines the travel path in creeping speed. Unit is mm.

4.5) G5-CONTROL PARAMETERS

Control parameters are mainly the parameters which are used to control the behaviour of the motor.

[C01] CARRIER FREQUENCY

Carrier frequency defines the time period during which the basic calculations of speed are carried out. A higher carrier frequency increases the performance of the inverter. However, some machines may become noisy in high carrier frequencies. Preferred value is 10 kHz. Source of motor noise is carrier frequency. User can adjust the motor noise by [C01] parameter. Noise will be higher if value is low; lower if value is high.

1..6	Carrier frequency

[C02] - ENCODER FILTER

This parameter defines the time period of reading encoder data. Making this period shorter results in a faster response to any speed deviation. However, a faster response may create some vibrations in speed. Set this parameter lower than 3 if ppr (pulse per revolution) value of encoder is less than 500.

1	1 ms
2	2 ms
3	4 ms
4	8 ms
5	16 ms

[C03] - ZERO SPEED Kp

1…200	Kp coefficient in zero speed control.

[C04] - ZERO SPEED Kd

1…200	Kd coefficient in zero speed control.

PID Control

AE-Maestro is a vector-controlled lift motor driver. It calculates required data carrier frequency times and assigns voltage and frequency of motor signals. Device receives motor speed via encoder of motor. If the reference speed differs from the motor speed, device makes calculations to reset this difference. PID control contains the definitions of the adjustment procedure.

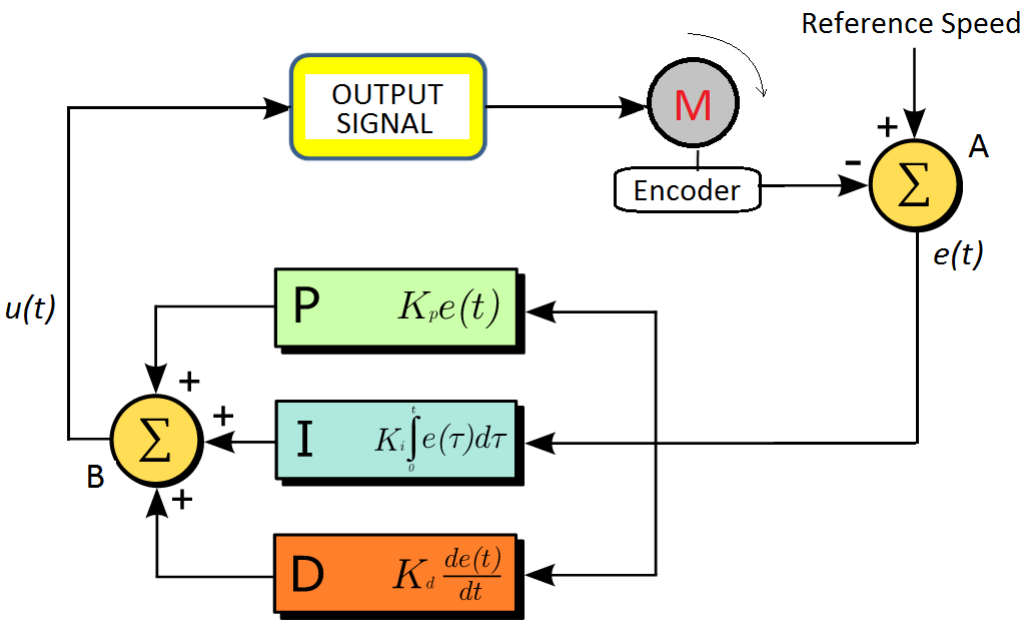

Figure 4.5a PID Control

PID is a control loop with feedback and is used in most ~~of~~ industrial processes. It is a pre-defined procedure of output refinement process. Figure 4.5a is a typical PID motor speed control system. e(t) is the difference between motor speed and reference speed called error signal. e(t) signal is processed from 3 different parallel channels. These are Proportional (P), Integral (I) and Derivative (D) processes. All channels calculate correction signals with defined parameters and send refinement signal to B point. Sum of refinement signals creates output signal u(t). Main functions of processes are described in the table below.

TERM	PROCESS	COEF	DEFINITION
P	Proportional	**Kp**	Main correction process of the control loop.
I	Integral	**Ki**	Sum of past errors' correction process. Improves the accuracy level.
D	Derivative	**Kd**	Correction process of transition errors. Improves the dynamic correction ability.

Zero Speed PD Control

Zero speed process is used to overcome slips when mechanical brakes open at start-up. PD coefficients are used in zero speed control. [C03] and [C04] parameters are coefficients of PD control on zero speed control.

Start Speed PI Control

Device only performs PI (Proportional and Integral) process on motion. Kp and Ti coefficients may differ in high and low speeds. Therefore, system has different Kp and Ti parameters for start speed, low speed and high speed

[C05] – START SPEED Kp

0,1..100	Kp coefficient on PID process when reference speed is lower than Start Speed [S09] parameter.

[C06] – START SPEED Ti

1…200	Ti (1/Ki) coefficient on PID process when reference speed is lower than Start Speed [S09] parameter.

Motion PI Control

When reference speed is higher than start speed, then Kp and Ti parameters are selected from [C07]-[C12] parameters according to reference speed. [C07] and [C08] are used where the reference speed is lower than [C11] PI Low Speed; [C09] and [C10] is used where the reference speed is higher than [C12] PI High Speed. Kp and Ti parameters change linearly between [C11] and [C12] reference speeds.

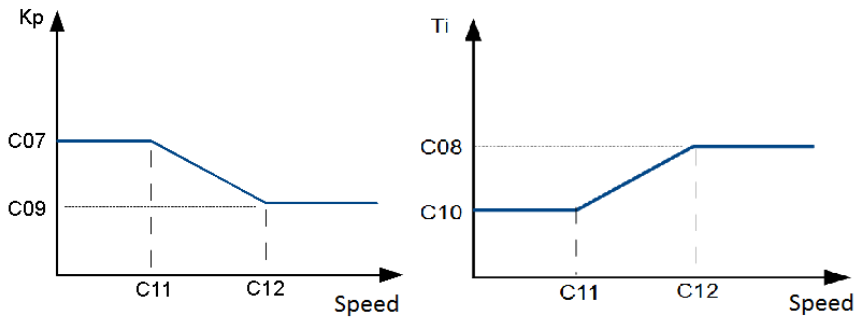

Figure 4.5b PI Values vs Speed

[C07] – LOW SPEED Kp

0,1…100	Kp coefficient when the system speed is lower than [C11] parameter.

[C08] – LOW SPEED Ti

0..9999	Ti coefficient when the system speed is lower than [C11] parameter.

[C09] - HIGH SPEED Kp

0,1…100	Kp coefficient when the system speed is higher than [C12] parameter.

[C10] – HIGH SPEED Ti

0…9999	Ti coefficient when the system speed is higher than [C12] parameter.

[C11] - LOW SPEED (PID)

0…5	When system speed is between the values in [C11] and [C12] parameters, Kp and Ti coefficients are selected according to system speed shown in Figure 4.5b. When system speed is below [C11], system uses [C07] and [C08] coefficient parameters.

[C12] - HIGH SPEED (PID)

0…5	When system speed is between [C11] and [C12] parameter values, Kp and Ti coefficients are selected according to system speed shown in Figure 4.5b. When system speed is above [C12], system uses [C09] and [C10] coefficient parameters.

[C13] – CURRENT Kp

0,1…100	Kp coefficient when the system speed is lower than [C11] parameter.

[C14] - CURRENT Ti

0,1…100	Kp coefficient when the system speed is lower than [C11] parameter.

Open Loop Control

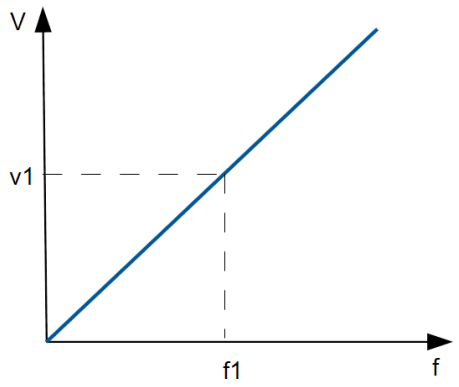

Figure 4.5c Open Loop Linear V/f Curve

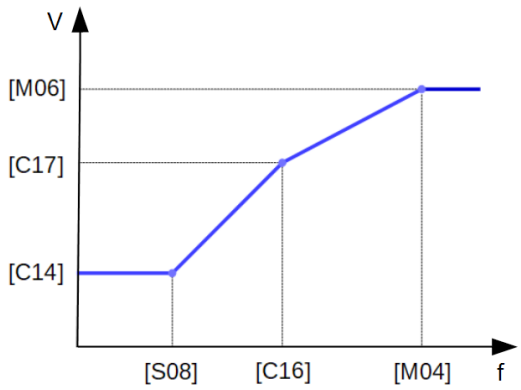

Figure 4.5d Open Loop Real V/f Curve

AE-Maestro is designed for lift operation with space vector control algorithm. Vector control requires a feedback from motion. This system is a more effective method for lift operations. However due to mechanical obstacles, encoder cannot be mounted onto motor. Feedback of motor cannot be received in this system called open loop control.

Due to feedback loss, stopping sensitivity can change according to the load on system. Use this system below 1m/s and for low load capacity lift operations.

Open loop control uses voltage/frequency (V/f) curve. As seen on Figure 4.5c, all frequencies have different voltage values. Increase on frequency increases drive voltage. However, on low frequencies, system cannot drive a motor because of the low voltage values. Adjust low frequency settings with [C16] and [C17] parameters shown in Figure 4.5d.

[C15] - DC BRAKE LEVEL(Percentage)

0…100	[C15] parameter defines the DC brake level at start-up and stopping. In DC braking the motor is held stable until the inverter starts to rotate the motor at starting and until the mechanical brake is released at stopping. The value of this parameter is used to define the strength applied to electrical braking power. DC brake is a DC load on motor coils and may warm up motor. On the other hand, If the value is lower than required, then the motor may move out of control.

[C16] - V/f STARTING SPEED

0,01…0,5	In V/f mode, system cannot start up with linear curve due to the static load. Instead the inverter drives motor with a constant voltage below a frequency point. [C16] parameter is the start point of V/f curve.

[C17] - V/f STARTING VOLTAGE

0,1…1	Minimum voltage level when the system speed is below [C16]-V/f Low Speed during acceleration and deceleration. [C17] parameter affects stopping and start-up power directly. If the value is more than nominal, motor may vibrate; otherwise device cannot drive smoothly at low speeds.

[C18] - CURRENT Ti

0…999	Current Ti coefficient of system **For synchronous machine set it at 40.**

[C19] - TORQUE Ti

0…999	Torque Ti coefficient of system **For synchronous machine set it at 40.**

[C20] - TUNING CURRENT(%)

1…100	The percentage of the motor current that will be applied to the synchronous motor in tuning process. If motor tuning is not completed, increase this parameter.

[C21] – FIELD WEAKENING

If motor is driven above its nominal speed, magnetizing current has to be decreased. This process is called Field Weakening.
[C21] parameter determines whether field weakening is active or inactive. Method 1 and Method 2 vary on process frequencies and weakening power.

0	Passive No field weakening. Magnetizing current will not decrease. (Motor may not reach set speed)
1	Active 1 Field weakening is activated. (Method 1)
2	Active 2 Field weakening is activated. (Method 2)

[C22] – RESERVED

[C23] - Pulse/mm

0,1…1000	This parameter stores the corresponding number of encoder pulses for mm shaft length.

4.6) G6-MOTOR PARAMETERS

This section has parameters on motor and encoder specifications. Some of the parameters have to be set by the user before tuning process and some of the parameters are set automatically by the tuning process.

[M01] - ENKODER PULSE

100…5000	Pulse value of encoder. Get this information from encoder label or contact encoder supplier.

[M02] - MOTOR SPEED

0,1…5	Nominal speed of motor. Get this information from motor label or contact with motor supplier.

[M03]- MOTOR RPM VALUE

100…3000	Rpm value of motor. Get this information from motor label or contact with motor supplier.

[M04] - MOTOR FREQUENCY

5…100	Nominal frequency of motor. Get this information from motor label or contact with motor supplier.

[M05]- MOTOR CURRENT

1…45	Nominal current of motor. Get this information from motor label or contact with motor supplier.

[M06] - MOTOR VOLTAGE

100…500	Nominal current of motor. Get this information from motor label or contact with motor supplier.

[M07] - MOTOR COS VALUE

0,1…1	Cos value of motor. Get this information from motor label or contact with motor supplier.

[M08] – NUMBER OF MOTOR POLES

2…99	Number of poles of motor. Get this information from motor label. If not, the formula of the pole calculation is as below. Number of Poles = $\frac{120 \times f}{d}$ Here f: frequency [Hz], d: Rpm value [rpm] Example: Determine the number of poles where frequency (f) is 50Hz and rpm value (d) is 1500 Number of Poles = $\frac{120 \times 50}{1500} = 4$

[M09] - MOTOR NOLOAD CURRENT (%)

15…100	Ratio of motor no-load current and motor nominal current. If the value is high, motor might use more current, otherwise if the value is low then motor start-up might be noisy or it cannot start-up.

[M10] - MOTOR Rs (ohm)

0,1…10	Resistor value of stator. Automatically set by tuning process.

[M11] - MOTOR Ls (mH)

10…3000	Inductance value of stator. Automatically set by tuning process.

[M12] - MOTOR Rr (ohm)

0,1…10	Resistor value of stator. Automatically set by tuning process.

[M13] - MOTOR Lm (mH)

10…3000	Mutual inductance value of motor. Automatically set by tuning process.

[M14] - MOTOR Tr (ms)

50…3000	Rotor time constant of motor. Automatically set by tuning process.

[M15] - ENCODER OFFSET

0…359.998	Encoder offset in synchronous motor. Automatically set by tuning process.

[M16] - ENCODER TYPE

This parameter defines the encoder type used in the inverter. An asynchronous motor uses INCREMENTAL encoder where an asynchronous motor needs an absolute encoder listed between 1..7

0	INCREMENTAL
1	ENDAT
2	SINCOS
3	SSI
4	BISS
5	ENDAT-SPI
6	BISS-BIN (Binary)
7	SSI-BIN (Binary)

[M17] - ENCODER DIRECTION

This parameter changes the precedence of encoder channels. Change this parameter only if there is a fault in zero speed section of motion.

1	CLOCKWISE
2	COUNTER CLOCKWISE

[M18] - TUNING MODE

1	Stationary Tuning Tuning process is applied without any motion on motor. If system ropes hanged out this system will be useful.
2	Rotational Tuning Tuning process is applied with motion on motor. If system ropes is not hanged out this system will be useful.

[M19] – MOTOR DIRECTION

1	Same Direction Command direction and motor direction is same.
2	Reverse Direction Command direction and motor direction is reverse

4.7) G7-HARDWARE PARAMETERS

[E01] – LANGUAGE

This is a shortcut to menu [E01] which is explained above. You can change the language from this menu. When this manual was prepared, supported languages were Turkish, English, German, French, Russian, Spanish and Greek. New languages will be supported in the near future.

1	Turkish
2	English
3	German
4	French
5	Russian
6	Spanish
7	Greek

[E02] – BUTTON PRESSED CONTROL

This parameter enables or inhibits checking of faulty button.

0	No faulty button is checked.
1	If a landing button remains pressed for 5 minutes then the system creates an error. This button is not read anymore and the lift can function normally. When the system is switched off or entered into inspection mode then disregarding the button is terminated.

[E03] – DEVICE LED DISPLAY

This parameter determines the information displayed on the LED DISPLAY on the device

0	Floor Number
1	Real Speed
2	Travel Speed
3	Set Speed
4	Current
5	DC Bus Voltage
6	Target Floor
7	Device Phase
8	Motion Phase

[E04] – LANDING ARROWS

This parameter determines the information indicated by landing arrow.

0	Landing arrows indicate motion direction.
1	Landing arrows indicate next direction.

[E05] - SERIAL CHANNEL 1

This parameter determines for which purpose serial port 1 SP1 is going to be used.

0	FREE Not used.
1	PC COMMUNICATION It is used to transfer data to a PC via ethernet or USB interface.
2	GSM MODEM A GSM modem is connected to SP1.

[E06] - SERIAL CHANNEL 2

This parameter determines for which purpose serial port 2 SP2 is going to be used.

0	FREE Not used.
1	PC COMMUNICATION It is used to transfer data to a PC via ethernet or USB interface.
2	GSM MODEM A GSM modem is connected to SP2.

[E07] - CAR CAN CHANNEL

E07 defines the interface channel for car and ALSK / ALPK communication.

0	CAN0
1	CAN1
2	CAN2

[E08] - LANDING CAN CHANNEL

E08 defines the interface channel for landing panels.

0	CAN0
1	CAN1
2	CAN2

[E09] - GROUP CAN CHANNEL

You can have only group connections at the CAN-port you have selected for group. You are not allowed to define any other device communications where group has been already defined. This restriction is only for group operation. Therefore, keep E09=3 when the lift is simplex where no group communication is used.

0	CAN0
1	CAN1
2	CAN2
3	NOT ACTIVE No group operation.

[E10] - ENCODER CAN CHANNEL

A10 defines the interface channel for absolute CAN encoder.

0	CAN0
1	CAN1
2	CAN2
3	NOT ACTIVE No encoder communication is used.

CHAPTER 5 - SERVICES AND UTILITIES

5.1) SETTING FLOOR LEVELS IN ENCODER APPLICATIONS

5.1.1) Auto Learning

In this section you can execute the service routine for encoder auto learning process.
The controller learns the position of the floors and shaft limits through executing this process. At the end of the learning process the floor positions and the encoder ratio (pulse / mm ratio) will be saved and used in further travels.

Before starting the shaft learning, travel complete the following task list:

1) Set the parameter for **FLOOR SELECTOR [A05] as 2** (for motor encoder) **or 3** (for shaft encoder).
2) Set the parameter for **LEVEL DETECTOR:**
   [A11=0] if motor encoder is used.
   [A11=1] if shaft or absolute encoder is used.
3) Place strip magnets at all floors to specify door zones. Make sure to place them at the centre of each floor. The length of the strip magnet determines the length of the door opening zone.
4) Install magnetic shaft switches **ML1** and **ML2** and connect to the circuit as shown in AE-MAESTRO electrical wiring diagrams. In this system only monostable (NO) magnet switches are used. ML1 and ML2 are placed together in one holder and they use the same strip magnet.
5) If motor encoder is used then install magnetic shaft switches **MKD** and **MKU** and connect to the circuit as shown in ILC electrical wiring diagrams. In this system only monostable (NO) magnet switches are used.
6) Place 817 (bottom shaft limit switch) and 818 (top shaft limit switch) switches. These switches will be used as shaft limit references in travel.

When the learning operation starts you will be asked about the length of the ML magnet strip. All lengths in encoder operation are expressed in mm.

After you enter learning, motion starts and you will see the screen below. All stages of the learning travel will be managed by the controller. The controller will move the car up and down along the shaft to measure the distances and floor positions. You should only look at the screen to follow the questions and the comments.

To start the learning operation the lift should be at the base floor. If it is not there then it first travels to the base floor. At the beginning, the lift moves upwards to the second floor and meanwhile measures the length of the strip magnet used for ML1 and ML2. Then it returns to the base floor and stops. Then it begins a second travel upwards and moves till top floor. It stops there at the floor level. Then it moves downwards and stops at the base floor level. Along this travel the controller reads and saves the positions of the ML strip magnets at all floors. It calculates the length of encoder pulses and saves this data to convert everything in encoder operation to the metric system. This conversion factor will be displayed on the screen during calculations. You will be informed of the end of the learning process on the screen. If it has been completed successfully without any errors. Then switch off and restart the system power. After that you should carry on the exact level adjustments for all floors as explained below.

5.1.2) Adjusting Floor Levels

After learning process, the estimated floor levels are saved.
The floor pulses can be edited by using the menu given above to adjust exact levels. However, there is another facility to adjust levels by moving the car. This procedure is explained below.

Floor levels can be adjusted by using car operating panel inside the cabin. There is special utility for this purpose. The car must stay at any floor level to start this procedure.

When adjustment procedure start, should go into the cabin and use car operating panel to give all further commands. This will help you to see level differences at floors directly and correct the saved floor level data based on the difference. We can strongly recommend you to use a hand terminal via CAN-bus. It will show you all details during operation while you are in the cabin.

When the operation starts the controller will open the doors completely and cancel landing calls but car calls will remain active. In this procedure first two call buttons and door close button on COP are going to be used as command panel.

The door stays always open during level adjustment motion as in re-levelling. Re-levelling speed is used for level adjusting. After starting the procedure, you can travel to a floor you can re-adjust simply by pressing related car call button. The lift moves to this floor and opens its door. So, you see the saved and real floor levels. If the car is below or above the floor level then you can move the car up or down as explained below by pressing two buttons together. When the car is exactly at the same level then you should save the floor position by pressing related car call button for 2 seconds. In this way, you can travel to any floor and tune it. After that you have finished with all floors then pressing ENT key on the keypad will save all the data you have changed and exits from this section.

To move car downwards:

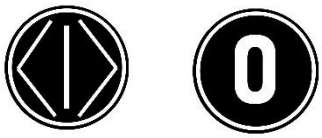

- Press and hold both, “**0**” and **door open** buttons together to move the car downwards.
- The car will move downwards as long as you hold them pressed provided that ML1 and ML2 see the strip magnet.
- If you press only 0-button then the controller considers it as a car call to ground floor.

To move car upwards:

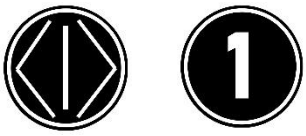

- Press and hold both, “**1**” and **door open** buttons together to move the car upwards.
- The car will move upwards as long as you hold them pressed provided that ML1 and ML2 see the strip magnet.
- If you press only 1-button then the controller considers it as a car call to the first floor.

To go to another floor: Simply press the related car call button

To save the floor position:

- Press and hold the car call button of the current floor for two seconds.
- After two seconds you will see its led flashing. This means that your data has been successfully saved.

To exit from this procedure:

After all the floors has been set correctly, save and exit on menu on the screen.

5.1.3) R5-RESET PULSES

You can set all encoder pulses to factory default values by using this routine. Then you will be asked to confirm resetting operation. After the execution all floor are adjusted to 3000 mm floor to floor distance.

5.2) PRIORITY FUNCTION

AE-MAESTRO software has a priority function. This function is very useful in buildings where public lifts are used. In case of emergency, these lifts can be called and used as a private lift by inhibiting normal usage. This system works only in full serial systems where landings are serial and requires access control readers (RFID or i-Button) in all landings and car.

In order to start priority operation firstly set ID Control parameter [B21] to 1…4. So you can register new ID cards or i-Buttons into the ACCESS CONTROL SYSTEM. The only difference in registering the keys for priority operation is that you should select 4 in EDIT ALLOWANCE. In this way the ID keys are registered for priority control. Once you have completed registering the ID keys, modify the value of parameter [B21] to 0. This makes the ID Control system inactive. Then set the parameter controlling priority operation [B21] to 1 to enable priority travel operation.

When [B21] is 1 then the lift operates normally while there is no priority request. A priority request can come from car or from any landing when their access control readers are activated with a registered ID key. When an ID key is read from any of the landing access control readers while the lift is moving then it changes its target to the floor where the priority call is given. If the current motion direction and the direction towards to the floor of the priority call are opposite, then the lift stops at the first floor in its travel direction. It immediately changes its direction and moves directly to the floor where the priority call is activated.
When the lift arrives at the floor of priority call, it stops and waits with open doors. The person with the priority key enters the car and then he or she shows his or her key to the access control reader in the cabin. Now the lift is ready for a priority travel. The person can bring the lift to any floor by means of pressing a button on the car panel.
The lift does not accept any landing calls throughout the priority service time. Only car buttons can be used to move the lift during this period.
The priority operation will be terminated when the access control reader inside the car is activated by the priority key for the second time. There is also a timeout to exit from priority system. If there are no calls in car panel for a time period defined in parameter [T41] while the lift is stationary then priority service routine is terminated.

5.3) ACCESS CONTROL SYSTEM

Access control utility permits only the users with appropriate permission to use the lift, in other words, it restricts any person who is not allowed to use the lift for a specific floor or time interval. For this purpose, each lift user should have a RFID card or i-Button key with a unique user ID.
In this section, how to register a new ID to the system as well as how to change its permission details will be explained. Access control system is active only when the parameter [B21] has a value greater than '0'.

5.3.1) ID LIST

For editing registered ID settings, you can use “Y1-ID LIST”. When this section has been selected then registered ID list will be displayed on the screen.

As you can see above each line shows one ID-code which contains three parts.

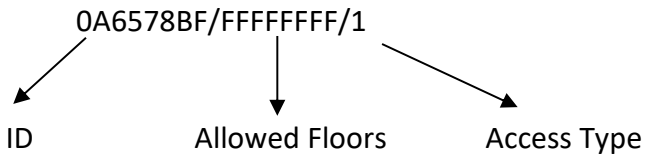

The left part ”0A6578BF” stores the unique ID-code for the users. The middle part “FFFFFFFF” holds the information of the floors which the users are permitted to travel. Each floor is represented by a bit in this information, where '1' means permission and ‘0' means restriction. The information on the right side specifies the status of the permission. The detailed explanations are given below.

You can move the arrow at the left side of the ID. Select the line you want to edit then press ENT.

The table below shows the operations you can select and their explanation and operation codes.

1	**All Floors Allowed**	To allow all floors, choose 1 with UP and DOWN buttons and press ENT. (Floors = FFFFFFFF)	
2	**No Floors Allowed**	To restrict all floors, choose 2 UP and DOWN buttons and press ENT. (Floors = 00000000)	
3	**Edit Allowance**	**0 – No Access**	No access to call register
		1 – Full Access	Full access to permitted floors’ call registers
		2 – Accessible in PE1	Access to permitted floors’ call register only for PE1 period (K8-Call Register Periods)
		3 – Accessible in PE2	Access to permitted floors’ call register only for PE2 period (K8-Call Register Periods)
		4 – Priority Key	Key is a priority key.
4	**Allow One Floor**	Choose the floor number you want to allow with UP and DOWN buttons and press ENT (It is a 32-bit binary number shown in hexadecimal format. Each bit represents one floor). For stops 3, 5, 10, 16, 23, 30: Floors: 40810428 (01000000100000010000010000101000b)	
5	**Restrict One Floor**	Choose floor number you want to restrict with UP and DOWN buttons and press ENT (It is 32-bit binary number shown in hexadecimal format. Each bit represents one floor) For stops 0, 7, 12, 19, 25, 29: Floors: 22081081 (00100010000010000001000010000001b)	

Table 5.1a Allowance for ID keys

5.3.2) FORMATS

When you want to add a new card or key to the system, you must assign it to a format. A format holds the information besides ID-code, namely allowed floors and status. There are 15 formats in the system. Therefore, we recommend you to evaluate your formats before starting to add keys or cards. The idea behind formats is to group users with similar permission criteria. When

you first save the permission details in a format, then you can add a number keys or card with this format and lots of details will be saved automatically. You do not need to edit the specifications for each new user separately.

There are 15 formats in the system. You can see all formats with the number 0 to 14 by moving the UP and DOWN buttons on the screen. Select the one you want to edit and then press ENT. You can edit a format similarly to the editing of an ID explained in the previous section. The only difference is that the edited information belongs to a format and not to an ID-code. Therefore, you will select a format number rather than an ID-code to start.
All formats have the information “all floors are restricted” as default. You can add the floors you want to allow by using operation '4', namely “ALLOW ONE FLOOR”, one by one to evaluate your format. Similarly, you can edit the status in the format.

The reason for saving more than one format is that you can split the users with similar access rights into groups and assign a different format to each group. So, in adding new cards or keys to the system, first select format and then register all the cars in this group.

5.3.3) ACTIVE FORMAT

In this section you can select the default format which will be active when you enter the “ADD NEW ID” operation.

5.3.4) ADD NEW ID

To add a new ID, select ADD NEW ID line with UP and DOWN buttons and press (ENT) button. On the new screen, system will wait for you to show a key or card to any station to read.

You can see on the screen the active format. It is '1' on the screen above. You can change the active format in 0-14 range. The system will wait from you to insert a key or card to the reader. When you insert the card or the key then its ID-code will be shown on the screen.

The new registered ID will be saved with the permission and status specifications of the current format. However, you can change its specifications as explained above in “ID LIST” section anytime you want. When registering a number of new keys or cards to the system with the same permission and status specifications, you can go on adding them without changing the current active format.

5.3.5) CLEAR ID

You can use this section in order to clear any ID-code from the system. Select the ID-code by looking at the arrow on the screen that shows the ID-code you want to clear. Then you will be prompted to clear the ID-code and complete the job.

5.3.6) CLEAR ALL ID-codes

In this section you can clear all keys registered in the system in one operation. You will be prompted with the following screen after selecting this section. Press UP button to clear all ID-codes in the system and complete the job. Please take utmost care while carrying on this operation!

5.3.7) FREE FLOORS

While using an access control system there may be a request to leave some floors freely accessible, for example the entrance floor. In this section you can program free floor(s).
When you select this section an operation code will be requested from you. The operations you can carry on and codes to set free floor(s) are listed below:

1	**All Floors Allowed**	In order to allow all floors, select '1' as operation code by UP and DOWN buttons and press ENT key.
2	**No Floors Allowed**	In order to restrict all floors, select '2' as operation code by UP and DOWN buttons and press ENT key.
3	**Edit Allowance**	Press ENT button to set or modify the allowance data.
4	**Allow One Floor**	Choose the floor number you want to assign as free floor by UP and DOWN buttons and press ENT button.
5	**Restrict One Floor**	Choose the floor number you want to stop being free floor by UP and DOWN buttons and press ENT button.

5.4) MAINTENANCE CONTROL

There are two independent control systems for maintenance mode activation. The first one is by setting a maintenance time in the future and the second is specifying a maximum number of starts for the lift. If the adjusted maintenance time or number of starts is exceeded then the lift switches to maintenance mode and does not accept any calls. In order to use the lift in normal operation the following parameter must be set. Both maintenance systems can be active simultaneously.

5.4.1) MAINTENANCE TIME

The system has a real time clock. In order to inhibit lift operation due to a time limit you should set the maintenance time for a future date. If this time is exceeded then the lift enters into maintenance mode and does not start a motion any more. One should set the maintenance time for a later date to enter into normal mode. Setting **day** or **month** as 0 disables maintenance due to time.

5.4.2) MAXIMUM START

If maximum start value is set to a nonzero number then the maintenance control system will be active. If the number of starts exceeds the number set as the maximum start then the lift will stop accepting new calls. In order to return normal operation either number of starts should be reset to 0 or maximum number of starts should be set to a greater value.

5.5) R4-MODEM SETTINGS

X1) Phone number will be used by the GSM modem in case of an error
X2) Phone number will be used by the GSM modem in case of an alarm
X3) Modem initialization string 1
X4) Modem initialization string 2
X5) Schedule

5.6) SETTING PASSWORD

You can change your password from this utility. Upon entering this menu, system asks for the current password.
If you enter the password correctly, system permits you to change system password to a number between 0 and 32000.

5.7) FACTORY DEFAULTS

When you are first starting with the controller or you want to clear all of the current parameters to reorganize them, you can set factory defaults. In this operation all parameters are first cleared and then set according to the lift type you have specified.

5.8) BACKUP OF PARAMETERS

After you have completed everything related to installation and adjusting the lift parameters it is very useful to save a copy of the full set of the parameters in a different memory location in the controller. This backup set of parameters are not open to any modification. They can only be saved as a whole for backup or restored all together from backup.
To save a backup of the current parameter set go to Services menu. When you have entered this section, you will be asked to enter an operation code.
You should enter 536 to run backup routine.

CHAPTER 6 - ERROR LOG AND ERROR CODES

In AE-MAESTRO Series Control Systems, all determined errors are reported at runtime on main screen and stored in permanent memory. Error storing capacity of system is limited to 250. If an error occurs when there are 250 errors stored in memory, then oldest error is cleared and the new one is stored. You can see last 250 stored errors anytime by using screen or from your computer connection.

6.1) ERROR CODES

CODE	ERROR	EXPLANATION
1	**Stop Circuit Open**	Stop circuit-120 (Speed regulator, parachute contact, stop buttons…) is open.
2	**125-135 Circuit is Open**	Door Contact circuit 125-130 is open during motion.
3	**140 Circuit is open**	Door Lock circuit-140 is open during motion.
4	**KDK contact is shorted**	
5	**DRB contact is shorted**	
6	**Pass Time Overflow**	1-At fast speed, system cannot not get new floor data within the time period defined at [T05]. 2-At slow speed, system could not reach floor level within the time period defined at [T31].
7	**Door Cannot Open**	After any door open command door contacts are not open within the period defined at [T20] for door A or [T25] for door B.
8	**Door Not Closed**	After transmitting any door close command, the door is not closed [KL1=0] for door A, [KL2=0 for door B) within the time period defined in [T21] for door A or [T26] for door B.
9	**817 - 818 Are Open**	Up and down limit inputs [817=0] and [818=0] are both open simultaneously.
10	**Floor Number is wrong**	The floor number obtained from the floor selector system is not correct.
11	**Counter Error**	Inconsistency in floor number on displays and car position. This error arises if the floor number is not 0 when the car is at bottom floor [817=0] and [818=1] or floor number is not top floor when the car is at top floor [817=1] and [818=0].
12	**Encoder Direction Error**	Encoder rotation direction is not the same as the car travel direction. If the motor is asynchronous (geared) then change the value in parameter M17. If the motor is synchronous (gearless) then change the value of M17 and interchange two motor cables (U,V,W). Then carry on autotuning procedure.
13	**No Encoder Signal**	No encoder signal is received from encoder while the car is moving within the time period defined [T40]. Check electrical connections of encoder circuit as well as the mechanical coupling of the encoder.

14	**Bypass Error**	If the bypass input is open [BYP=0] and the lift is in normal mode then this error arises. Bypass switch must be normally closed.
15	**Park Floor Definition**	Defined park floor parameter in [B07] is above the maximum number of stops defined in [A01]. [B07] can be maximum [A01]-1.
16	**Fire Floor Definition**	Defined fire floor parameter in [B05] is above the maximum number of stops defined in [A01]. [B05] can be maximum [A01]-1
17	**U2 Communication Error**	Internal communication problem between electronic boards inside the device. Switch off the device. If the problem persists then consult the technical service.
18	**No Car Communication**	System cannot communicate with car units. Check serial communication states of the main board and the car controller. If BE or LEDs on CAN drivers are ON then there is something wrong either in electrical wiring of CAN units or in values of the termination resistors. Check also parameter [E07]. It defines the CAN-channel used for car circuit. You should connect car communication cables to the CAN-port denoted in [A18]
19	**MCI Short Circuit**	MC contactor is not OFF. MCI input must be used when ILC is used not in STO mode but with serial contactors at the output. This error is arised when MC contactor is OFF but MCI input is not active.
20	**NO PTC/Thermistor**	Motor is overheated or PTC circuit is not connected [PTC=0].
21	**Floor Pulse Error**	Current car position is inconsistent.
22	**Door Motor Hot**	Automatic door motor is overheated or DTP input is open [DTP=0].
23	**Releveling trial error**	Releveling has been done many times but cannot be completed properly.
24	**Shaft learning has not been executed and saved.**	If floor selector is incremental or absolute encoder then you need execute shaft learning procedure at least once. If this has not been done you will get this message.
25	**Encoder Data Error**	Floor Pulse data is missing or faulty. Shaft learning should be carried out.
26	**Machine Room Temperature**	This error message is raised if the machine room temperature is outside the adjusted temperature region and any new start of the lift is prohibited. [B27=0] clears machine room temperature detection. No checking is carried out. If [B27=1] then checking MR temperature is carried out with the detector on AE-MAESTRO main board. If the temperature around the main board is lower than the value defined in parameter [B28] or greater than the value defined in parameter [B29] then error 26 is created. Check the temperature around the mainboard and the defined limits. If [B27=2] then checking MR temperature is carried out by an external measuring device. The controller reads its output through the terminal input [THR]. Check if THR input is connected to the external device and the adjustment of the external device.

27	**MC is not ON**	MC contactor is not ON. MCI input must be used when ILC is used not in STO mode but with serial contactors at the output. This error is arised when MC contactor is ON but MCI input is stil active.
28	**MC is OFF during travel**	MC contactor is OFF during motion.
29	**Contactor Failure**	Although there are no contactors activated, there is no signal in CNT terminal. Check CNT wiring and definition. Check also the wiring of the CNT circuit through normally closed aux-contacts of the contactors.
30	**TKF Contactor is not ON**	TKF contactor is not on. See section 12.1.
31	**Low DC-Bus**	Dc Bus voltage of the motor driver is low.
32	**High DC-Bus**	Dc Bus voltage of the motor driver is high**.**
33	**ML2 Open at Floor**	If ML2 switch becomes passive [ML2=0] while the car is staying at floor level this error is created. If the doors are open then it is an UCM error and the system is blocked. Check the magnet and switch locations of ML1 and ML2.
34	**ML2 Short Circuit**	This error is reported if ML2 switch is still on [ML2=1] when the car has left the door zone. Check the switches, magnets, inputs and wiring related to ML1 and ML2.
35	**Phase L1/R Missing**	L1/R phase is not present. Check line phase.
36	**Phase L2/S Missing**	L2/S phase is not present. Check line phases.
37	**Phase L3/T Missing**	L3/T phase is not present. Check line phases.
38	**Switching Error**	There is voltage on dc Bus although input relays are not switched on.
39	**SPI Error**	There is communication fault between internal microprocessors.
40	**Door Contact Failure**	Despite doors being physically closed, door contact is not closed. The physical state of the door is controlled by KL1 and KL2 inputs.
41	**Levelling Period**	If levelling job cannot be completed within the time period defined in the system (10 sec) this error is created.
42	**ARN Contact Error**	ARN contact failed. See section 11.1.
43	**ARD Contact Error**	ARD contact failed. See section 11.1.
44	**KL1 – KL2 Are Open**	According to EN81-20/50 car doors must be physically closed in bypass mode in any inspection travel. KL1 and KL2 inputs on car doors are used to check this. If any door contact KL1 or KL2 is open in inspection travel in bypass mode this error is created.
45	**SDB Bridging Error**	This error is reported if SDB board cannot bridge safety line after activated. Check 140, ML1, ML2 inputs, ML1 and ML2 switches and related magnets.
47	**Resetting Inhibited**	Resetting car position after re-start has been inhibited by parameter B35. This is a warning message, not fault.
48	**ERS Battery Error**	Voltage level of the battery of the emergency power supply is low.
49	**ERS Door Not Open**	After the rescue operation has been completed the doors are opened. If the doors cannot be opened within the time period [T32]. Check door supply voltage and door control signals

50	**ERS Door Not Closed**	If in rescue operation the door cannot be closed within the time period determined by timer T32 then this error is created. Check door supply voltage, door contacts and door control signals
51	**ARN+ARD ERROR**	Both ARD and ARN contacts are wrong simultaneously. See section 11.1.
52	**ERS Maximum Period**	If the emergency rescue operation takes a longer time then the period stored in timer parameter [T36] this error is reported.
53	**ML1 Open at Floor**	If ML1 switch becomes open [ML1=0] while the car is staying at floor level this error is created. If the doors are open then it is an UCM error and the system is blocked. Check the magnet and switch locations of ML1 and ML2.
54	**ML1 Short Circuit**	This error is reported if ML1 switch is still closed [ML1=1] when the car has left the door zone. Check the switches, magnets, inputs and wiring related to ML1 and ML2.
55	**MODE ERROR 33CP**	Limax 33CP absolute encoder system cannot change its mode.
56	**Fire Reset**	Although all fire inputs have been returned to their normal positions, after a fire state then the system will not return to normal, if the parameter [A14==4]. See section 8.24.
57	**Call Button Error**	If a hall button stays more than 300 seconds pressed then the system reads it no more, set as faulty and display this message. Entering into inspection mode clear this message. This facility can be activated or inhibited through adjusting parameter [E02].
58	**Earthquake**	Earthquake signal is received [EQK=0] due to a low signal at EQK input. The system will switch into earthquake mode.
59	**Bottom Final Stop**	The car has been exceeded bottom final stop downwards.
60	**Top Final Stop**	The car has been exceeded top final stop upwards.
61	**Retiring Cam Period**	Door contacts are not closed (125-130) within the defined time period after the retiring cam has been energized. Check door contacts, the activation process and definition of the retiring cam.
62	**Pit Board Communication Error**	If there is a pit controller [A18=1] then the controller communicates with it. If no communication is established with pit controller board then this error is created. Check CAN shaft connections and E08 parameters. Please note that pit board communicates via shaft CAN channel.
63	**Brakes are closed**	This error is created if the brakes of a gearless machine are closed during motion.
64	**Brake Not Closed**	Although the brake coils have not been energized, no signal is received from brake feedback contacts. Check BR1, BR2 terminals, contacts, definitions and related wiring. This error is reported only if the parameter A16 was set to 1 [A16=1].

65	**Brake Not Opened**	Although brake coils have been energized, signal is received from brake feedback contact. Check BR1, BR2 terminals, contacts, definitions and related wiring. This error is reported only if the parameter A16 was set to 1 [A16=1].
66	**SGC Error 1**	Although SGD board has not been energized trough RSG output, SGC input signal is passive [SGC=0]. This error is created only if the parameter A16 was set 1, [A16=1]. Check RSG output and SGC input, related wiring and definitions.
67	**SGC Error 2**	Although SGD board has been already energized trough RSG output, SGC input signal is active [SGC=1]. This error is created only if the parameter A16 was set 1, [A16=1]. Check RSG output and SGC input, related wiring and definitions.
68	**Photocell Error 1**	An external photocell error is detected through FE1 input.
69	**Photocell Error 2**	An external photocell error is detected through FE2 input.
70	**Governor Contact Error-3**	When the motion has been started and coil on the overspeed governor has already been energized, if SGO input signal is still ON [SGO=1], then this error is reported. Check the coil on the speed governor, its wiring and SGO input terminal.
71	**Rescue Speed Exceeded**	Rescue speed is exceeded during a manual rescue operation. Release brake activation buttons to stop the lift. Do not press brake buttons continuously. Press and release them in short periods while monitoring the car speed not to exceed 0.3 m/s.
72	**UCM Fault**	Unintended Car Movement UCM is detected. This error is created if the car leaves the door zone with open doors. This error is stationary and must be cleared manually. Check ML1 and ML2 switches and related magnet positions. Check also the UCM device connections and settings.
73	**Governor Contact Error-1**	If SGO input signal is still OFF [SGO=0] although OSG A3 coil has not been energized then this error is created. Check SGO definition, contact and wiring. Check the coil on the speed governor.
74	**Governor Contact Error-2**	SGO input signal is still ON [SGO=1] although OSG A3 coil has already been energized, Check SGO definition, contact and wiring. Check the coil on the speed governor.
75	**Safety Gear Activated**	Safety gear has been activated. The information is obtained through PFK input
76	**End Switch Failed**	When special last floor switches (917, 918) are used, [A17=1], and if both switches are open simultaneously, [917=0] and [918=0], then this error is created. Check 917 and 918 inputs, definitions and [A17] parameter.
77	**HD/HU Failure**	High speed switch (HU or HD) is not responding properly. Its state is inconsistent with other shaft switches.
78	**Encoder Communication Failure**	When a CAN absolute encoder is used as floor selector, [A05=4], this error is created if the system cannot communicate with the encoder. Check encoder wiring and parameter A05.

79	**Encoder Learning Failure**	When incremental encoder is used as floor selector [A05>1] and if the encoder cannot complete learning process, then this error is reported. Check encoder wiring and parameter A05. Check also ML1, ML2, 817 and 818 switches.
82	**CNT Short Circuit**	This error is reported if the contactor feedback input is still on [CNT=1] while the lift is in motion. Check CNT terminal, contactor aux. contacts and their wiring.
84	**ALSK/ALPK Not Present**	If ALSK or ALPK board is not connected to the car CAN-bus or there is a communication fault in this bus then this error is reported. Check terminal board, CAN bus wiring and 24V power supply.
85	**SDB 141 Fault**	When the car is at door zone and bridging is activated by the controller then 141 must be ON. If not, then this error is created. Check SDB board.
86	**Door Test Error**	Door test has not been completed at the floor properly. Check door contacts.
87	**Shaft Inspection Reset**	To return to the normal mode from shaft inspection it is not sufficient to switch inspection off. KRR must be trigged once to clear shaft inspection. This message will be displayed after the shaft inspection switch has been returned to normal until KRR is switched once while the doors are closed.
88	**KL1 Shorted**	Door closed contact of the first door is still closed [KL1=1] though the first door is open. Check contact, wiring and input definition of KL1.
89	**KL2 Shorted**	Door closed contact of the second door is still closed [KL2=1] though the second door is open. Check contact, wiring and input definition of KL2.
90	**TKF SHORTED**	TKF contactor is not activated at start. If TKF input is read ON it means the contact of TKF contactor is shorted. See section 12.1.
101	**OVERCURRENT**	Driver has detected instantaneous overcurrent.
102	**CURRENT ERROR**	Motor current cannot be read due to an internal failure.
103	**IPM ERROR**	Motor driving module sends error signal.
104	**ENCODER ERROR**	Encoder is not connected or it send incorrect signal.
105	**MOTOR DIRECTION ERROR**	Motor direction is opposite of encoder direction
106	**MOTOR CABLE ERROR**	Fault in motor cables is detected.
107	**ICA BOARD ERROR**	Absolute encoder interface board (ICA) cannot communicate with the Absolute Encoder in synchronous motors.
108	**OVERSPEED ERROR**	Encoder speed is greater than 115% of reference speed.
109	**LOW SPEED ERROR**	Motor cannot reach reference speed.
110	**MOTOR OVERSPEED ERROR**	Encoder speed is greater than 115% of motor nominal speed.
112	**PERMANENT IPM ERROR**	IPM sends error signal. IPM is faulty.
113	**INTERNAL SERIAL ERROR UART**	Failure in internal UART communication

114	**INTERNAL SERIAL ERROR SPI**	Failure in internal SPI communication
115	**DC BUS READING ERROR**	DC BUS cannot be read accurately.
116	**STO SUPPLY ERROR**	If STO is activated and 15V Gate power supply is not ON.
117	**ZERO SPEED ERROR**	Error in anti-rollback process in starting.
118	**REMAINING DISTANCE ERROR**	Error in calculating Remaining distance
119	**15V VOLTAGE FAILURE**	No 15V gate supply is active after a motion command.
120	**CURRENT W/O MOTION**	There is an output current without any motion.
121	**GATE DRIVER OPEN**	Error in IPM driver circuit.
122	**PULSE ERROR IN LEARNING**	Read shaft data is inconsistent in learning process.

CHAPTER 7 - UCM SERVICES

7.1) UCM

7.1.1) DEFINITIONS

DOOR ZONE: This is the region where the car is allowed to open the doors. It is determined by switches ML1 and ML2 in the AE-MAESTRO system. Both ML1 and ML2 must be normally open contact switches.
UCM: Whatever the drive system is, if the car moves outside to the door zone while staying at the floor level and the doors are open this will be considered as an UCM error.
UCM BLOCK: When any UCM error occurs, then the system is blocked. This is a permanent error. A permanent error continues to block the system even if the error condition disappears. Switching the system to inspection mode or switching it off will not clear UCM block. UCM Block can only be removed by authorized person by using the UCM-CLEAR ERROR menu.
UCM TEST: This is the procedure to test if the lift is responding correctly within norms when an UCM error occurs.

7.1.2) RELATED PARAMETERS

The parameters related to the activation or error behaviour or the UCM error are listed below:

A16-UCM CONTROLLER: In order to activate UCM control A16 should be 1. If [A16=0} then no UCM errors will be raised, no UCM drivers are activated and no checks for UCM conditions are carried out.
B04-UCM ERROR BLOCK: This parameter determines the blocking of the system after any UCM error. You can allow or inhibit blocking after any UCM error. Inhibiting blocking after an UCM error does not conform to the standards EN81-20/50 and EN81-1+A3.

7.1.3) UCM Detection (Unintended Car Motion)

a. While the Car is Resting at Floor Level

Whatever the drive system is, if the car moves outside to the door zone while staying at the floor level and the doors are open then this will be considered by the controller as an UCM error (ML1 or ML2 is 0). *Error No:72* “UCM ERROR” will be displayed on the screen.

b. During Pre-Opening Doors or Relevelling

If the lift moves out of the door zone due to any reason during the re-levelling motion then AE-MAESTRO control board considers this situation as unintended car motion and switches the system to BLOCK mode. *Error No: 72* "UCM Error" will be displayed on the screen.

If any bridging fault is detected in SDB board during the early door opening or levelling motion then the controller switches to BLOCK mode and “Error No. 45 SDB Bridge Error" message will be displayed on the screen.

7.1.4) UCM Error Clear

If any system block due to any UCM error should be cleared manually. UCM error clearing should only be carried out by authorized personnel.

7.2) UCM in Electric Lifts with Asynchronous Motor

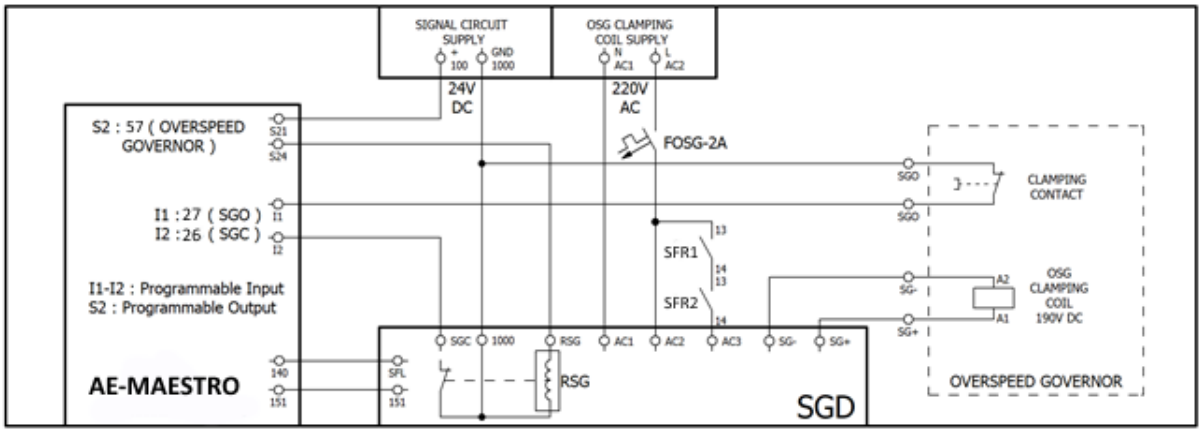

Figure 7.2a

In geared machines, UCM protection is ensured by controlling the speed governor together with SGD board. Therefore, SGD board must be used for UCM control for asynchronous motors (geared traction machine).

When there is a motion command in the system, then the controller activates SGD board through a programable output, 57-Speed Governor Coil. This activates the relay on SGD board, which activates the coil on the speed governor and the control pin on the speed governor will be pulled back. So, the speed governor can rotate freely while the car is moving. Any attempt to move the car while the pin is not pulled back causes in activation of safety gears.

- When the coil is energized then the pin inserted into the wheel of the governor will be pulled back. The controller monitors the status of the pin and coil activation relay on SGD through SGO and SGC inputs, respectively.
- If SGC input will not be off within 3 seconds after the SGD board has been energized, *Error No: 67* "SGC ERROR-2" will be generated.
- The SGO input must be off (0) within 3 seconds after then. If SGO is still ON at the end of this period error 74 will be generated by the controller. It will display “*Error No:74* Governor Contact Error-2” on the screen.

- When the controller terminates motion then output 57 is switched off. If the SGC input is not switched to 1 within 3 seconds, then the controller generates error 66 with a message on the screen as "*Error No. 66* "SGC Error 1".
- SGO input is checked after motor contactors are off. It should be ON. if SGO input is OFF then "*Error No:73* "Governor Contact Error-1" is generated which causes the system to enter BLOCK mode.

If SGO and SGC inputs are correct then AE-MAESTRO controller starts motion. If any changes in these inputs are detected during motion, then the lift will be stopped immediately and error 70 will be generated with a message "*Error No:70* Governor Contact Error-3".

The system will be blocked after the errors 66, 67, 74 related to SGO and SGC input states. However, this blocking is not permanent and will be terminated when the system is switched to the inspection mode or switched off.
Nevertheless, if the errors 66, 67, 74 are repeated by the number specified in parameter [B05], then the system will be blocked permanently.

7.3) UCM in Electric Lifts with Synchronous Motor (Gearless Machine)

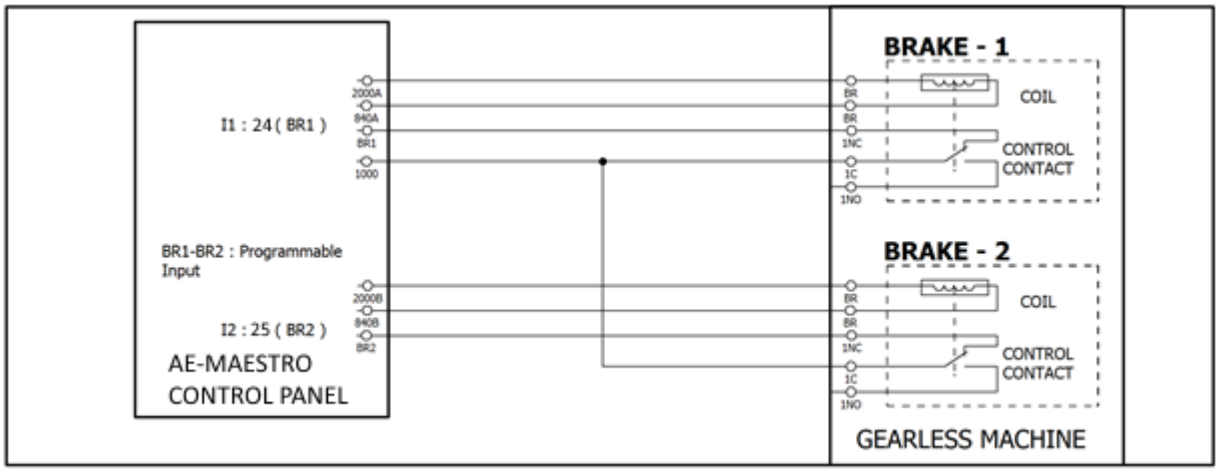

Figure 7.3a

All gearless machines have brake monitoring contacts. AE-MAESTRO board reads these contacts through BR1 and BR2 inputs. These contacts are normally closed. Therefore, BR1 and BR2 inputs are always ON when the brake coils are not activated, in case of resting. If one or both inputs are OFF then the controller switches the system to BLOCK mode and "*Error No:64* Brake Not Closed" is displayed on the screen.

When the controller starts motion then the brakes are opened. This makes these contacts OFF. In this case, if any one or both of the BR1 and BR2 inputs keep to be high 1 after 3 seconds, then the controller switches the system to BLOCK mode and "*Error No:65* Brake Not Opened" will be displayed on the screen.

7.4) Manual UCM Test

This menu is to simulate an unintended car motion that may occur. It used to test the real behaviour of the lift in case of an UCM event.

7.4.1 Warning

Before starting this test process, be ensured that there is nobody or any load inside the cabin and prevent usage of the lift.

In order to be able to perform the test, the system must be in the normal mode and the cabin light (Busy signal is off) must be turned off to ensure that the lift is not in use. Test operation cannot be performed in inspection mode.

7.4.2 Test Procedure

a. SELECTING TEST SPEED: "TEST SPEED: SLOW" is displayed on the screen. You can switch between HIGH and SLOW speeds by pressing RIGHT (>) and LEFT (<) buttons. Confirm the selected test speed.

b. SELECTING TEST DIRECTION: You can switch between UP and DOWN speeds by pressing (↑) or (↓) buttons. Confirm the selected test direction.

c. In next step, "UCM TEST START" is displayed on the screen. Press (↑) button to start manual test.

d. Manual test has been started by the controller by opening the door. When door starts to open, the return of the safety line becomes open circuit (140=0).

e. Then the controller activates the door bridging process through SDB board which makes the return of the safety line ON (140=1).

f. When the safety line is open and door circuit has been bridged the system is activated.

g. If the machine is geared then overspeed governor coil is energized. When the signal at the SGO input is off, then the controller initiates motion in selected speed and direction.

h. If the machine is gearless (synchronous motor) then the controller initiates motion in selected speed and direction.

i. When the car goes out of the door zone (ML1=0 or ML2=0) with open doors then the controller considers it as UCM and the car is stopped immediately. Contactors and the door bridging are switched off. All adjusted delays of the switching elements in stopping are disregarded.

j. The car position, namely the distance from the cabin sill to the floor level should be measured. It should be within the limits specified in clause 5.6.7.5 of EN 81-20.

k. The controller enters into the BLOCK mode. It does not respond to calls. "*Error No: 72* '' UCM ERROR '' is displayed on the screen. This is an UCM error and it is permanent. The lift can return to the normal mode only after clearing this error by menu: G05-SERVICES > R1-CLEAR ERROR.

l. If no error has been generated by the controller while the car is travelling outside of door zone with open doors then we can decide that UCM detection or activation of the system is not responding properly. A careful check of parameters, input and output settings and wire connection must be carried out. After fixing the problem this test must be repeated before giving the lift to the service.

CHAPTER 8 - RESCUE SYSTEMS

8.1) ELECTRONIC RESCUE SYSTEM

In AE-MAESTRO control system, there is an automatic rescue system (ERS) to rescue the passengers in case of power failure. Electronic Rescue System automatically switches on when the controller detects an error in mains phases. The device accepts several input voltages as power source in rescue operation. This voltage should be selected in parameter [A24].
There are two types application of rescue power system as described below.

8.1.1) Parameters used with Rescue Application

[A23] EMERGENCY RESCUE OPERATION ALLOWED: Emergency rescue operation is carried out only if [A23=1].
[A24] EKS VOLTAGE: Voltage supplied to the device in case of rescue operation.
[T36] MAXIMUM RESCUE PERIOD: If the rescue operation cannot be completed within the time period specified in this parameter, the controller terminates the rescue operation.
[T32] ERS DOOR WAIT PERIOD: Defines the time period in which the doors will wait open after reaching floor in a rescue operation.
[B20] ERS MK DELAY: It defines the delay required to stop the lift in exact floor level in rescue mode. Since the lift rescue speed is much lower than the travel speed, the car may not reach to the floor level when the stop command is activated. To reach to the floor level the car motion can be extended (stopping delayed) related to this time period.

8.1.2) Hardware Connection Types

8.1.2.1 Electronic Rescue System-1: Type-J

In this system, motor energy is supplied by the batteries and other energy requirements are provided by an UPS. The sample system is shown in Figure-8.2a.

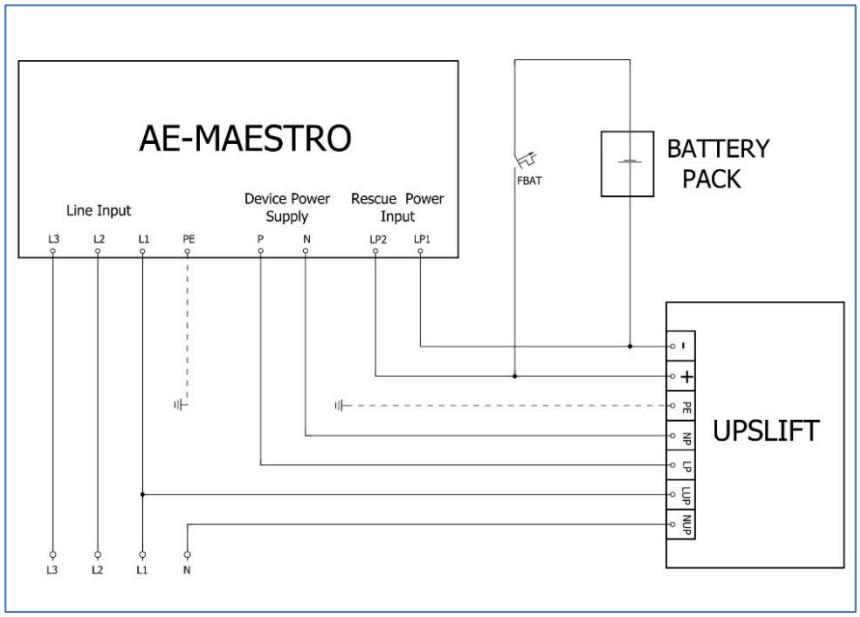

Figure 8.2a J Type Rescue Connection Diagram

8.1.2.2 Rescue System-2: Type-N

In N-type rescue system only UPS is used as the energy source for the lift.
It is shown in Figure-8.2b.

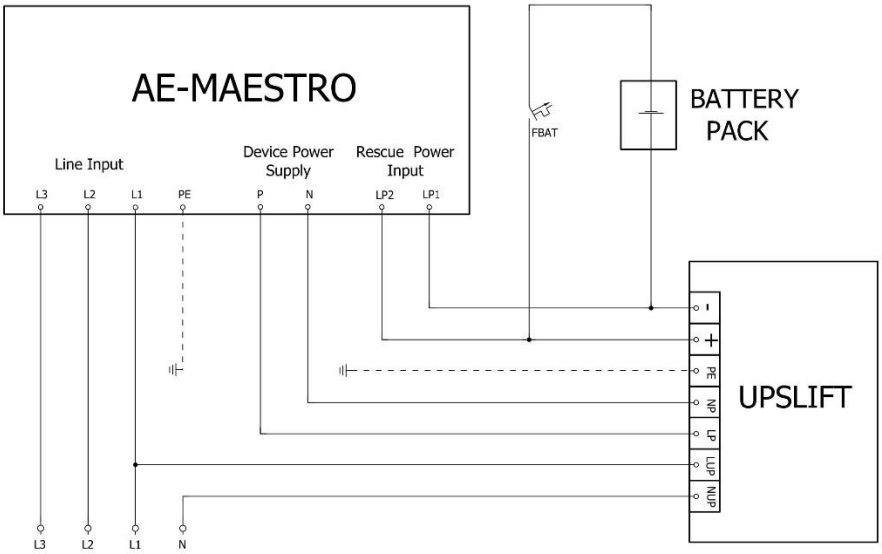

Figure 8.2b N Type Rescue System Connection Diagram

8.1.3) Electronic Rescue Procedure

The device has a phase detection system that monitors the status of the power line. As long as the line is stable, the phase information FKK observed from the input screen is active (FKK*).

If ILC detects any power failure in line phases then it waits for the time period defined in **parameter T16**. If the line is not restored within this period then it enters into rescue mode. The first operation in rescue mode is the isolation of the panel from the mains supply and connecting to the emergency power supply.

Rescue Process:
After the rescue direction is selected, the motion continues until any floor level is reached. If the rescue operation is not completed within the **time period T36**, the controller will terminate this operation by generating “52-ERS Period Exceeds” error. When the lift reaches the floor level, the doors are opened to allow the passengers to go out of the cabin. The doors are closed again after waiting four times of the time period defined in **T06-DOOR ON WAITING** parameter.

At the end of the rescue operation the system is stopped. Contactors are disabled and no further action is taken until the mains power returns to normal.

8.2) MANUAL RESCUE SYSTEM

8.2.1 RECALL SYSTEM

If the controller is powered by line or any other emergency power supply then RECALL system can be used to rescue the passengers in the cabin. Recall is activated by **870** terminal. Pressing up (**551**) and down (**550**) buttons on the recall command box makes the car move, respectively. All shaft limits can be overridden by recall. So, the car can be moved beyond the limits. However, remaining part of the safety line must be closed including doors.

8.2.2 BRAKE OPENING

If the controller is fed by an emergency power supply which is not capable to drive motor then brake opening method can be used. In this method the brakes of the machine are activated by pushbuttons in the controller. However, there must be a speed limitation system then to prevent free fall of the car. According to the lift standards the car speed must not exceed 0.3 m/s. In brake opening method the controller is completely out of the process. Everything is carried out by the operator. Therefore, the operator must observe the speed and stop the lift by releasing the buttons whenever the car speed exceeds 0.3 m/s. The operator must not press brake buttons continuously. The buttons should be pressed and released in short periods in order to be able to control car speed and prevent the speed going out of the control.
Chapter 7

ILC has a special feature to facilitate this job. The front panel can be used as a monitor of the car motion. In order to start this function, **MRC** input must be defined and activated. Then the led display on the front panel shows the car speed as well as travel direction and sends an audible alarm when the car speed exceeds 0.3 m/s.

Please be informed that open loop systems (without motor encoder) where no speed feedback is present cannot be employed so.

CHAPTER 9 – FIRE SERVICES

ILC supports two lift standards related to fire event, EN81-72 and EN81-73.

9.1) Selecting Fire Standard

The standard which will be used in lift operation should be defined in parameter [**A14]**.

0	EN81-73
1	EN81-72 Fire fighter Lift
2	EN81-72 Fire fighter Lift with car fireman switch
3	Reserved
4	EN81-72 Fire fighter Lift with blocking after operation

If [A14=0] is selected then in case of fire the lift travels directly to the fire exit floor, opens the door and waits there without accepting any calls. The lift cannot be used anymore.

If [A14] is selected greater than zero then the lift can be used by fireman as fire-fighter lift in case of a fire.

9.2) Fire Exit Floor and Fireman Access Floor Definition

9.2.1) Floor Definition

There are 4 programmable fire inputs in the system. They store floor number which are called as **fire floors**. When any of them are activated then the lift clears all pending calls and directly moves to the fire floor. If the lift is in travel and the fire floor is in the opposite direction then it stops in the first possible floor, reverses its direction and moves to the fire floor.

If [A14=0], namely EN81-73 is the selected standard, then fire floor shows the floor where the passengers inside the cabin have to exit in case of brand.

If [A14>0], namely EN81-72 is the selected standard, then fire floor shows the floor where the fireman can enter the cabin to get its control to rescue people in the building.

The related input names and parameters for fire floors are shown below:

	Input Name	**Parameter which stores Fire Floor**
1.Fire Floor	FR1	B14
2.Fire Floor	FR2	B15
3.Fire Floor	FR3	B42
4.Fire Floor	FR4	B43

Depending on the activation of the fire inputs functions FR1 … FR4, related floor will be selected as the target floor (fire floor) for the lift according to the B parameters listed above. If more than one FRx inputs are active simultaneously then the one with smaller number is selected as the target floor.

9.2.2) Fire Input Polarity

Parameter [**B40**] defines the polarity of the active state of the inputs FIR1…FIR4.

Parameter B40	Fire alarm is activated…
0	if the input FRx is low (connected to Node 1000).
1	if the input FRx is high (connected to Node 100).

9.2.3) Outputs

22	Fire Alarm (Fire Operation started)
23	Down in Fire (Down Motion in fire operation)
24	Up in Fire (Up Motion in fire operation)
25	Fire Door Alarm (Slow Closing Signal in fire fighter lift in fire phase 1)
64	Fire No Exit (Car at fire exit floor in EN81-73 standard)

9.2.4) EN81-73 Related Parameters

Parameter B41	If the lift is at fire exit floor in case of a fire alarm, then…
0	the doors will wait open
1	the doors are closed after door open wait period (T6 and T22).

Messages	
Fire Reset	Although all fire inputs have been returned to their normal positions, after a fire state then the system will be blocked and do not return to normal state, if the parameter [A14=4]. Returning to normal operation is possible by a re-start or through inspection mode, namely by entering and exiting from inspection.

9.2.5) Parameters Related to Fire Fighter Lift (EN81-72)

B39	It defines the number of car doors at the fireman access floor (as 1 or 2).

Input Name	Input Number	
FRM	43	Fireman Switch at fire fighter access floor
FRC	44	Fireman Switch in car operating panel
AL1	I21	Door open limit switch
AL2	I31	Door open limit switch for second door

CHAPTER 10 – TEST SERVICES

10.1 TEST MENU

There is a special utility in ILC system for testing the lift in normal operation. The doors or calls can be easily cancelled. A call to the top or bottom floor can be created and any number of random lift travels can be executed automatically.

Test menu can be activated at any time.
The functions are as follows:

a) **Call to Top Floor:** A car call to the top floor is created.
b) **Call to Bottom Floor:** A car call to the bottom floor is created.
c) **Calls:** Car and Landing cars are disabled or enabled. When disabled '-' sign and when enabled '+' sign is shown.
d) **Doors:** Doors can be disabled or enabled. When enabled '+' sign is shown and the door opens normally. When disabled '-' sign is shown and the door does not open when arrived at the floor.
e) **Random Calls:** A number is entered to the system. The lift starts by generating calls for a random floor as many times as the number entered, automatically. The condition specified by doors remains during the test. This procedure is usually carried out to test a new lift before giving it to the service.

DOORS+	CALLS+
ESC	MOVE

10.2 SHAFT LIMIT TEST

The performance of the shaft limit switches can be tested by using this test. To start the test the following conditions must be met:

-The car must be at bottom floor to test bottom limit switch.
-The car must be at the top floor to test top limit switch.
-The lift must be in Normal operation mode.
-Busy signal must be off.

When executed, the lift moves up (at top floor) or down (at bottom floor) in creeping speed (S08) in order to exceed shaft limits. The travel is terminated by opening the limit stop switches. So, the emergence of the stop error indicates that the limit switches are working properly. If no stop error is created then it means the limit switch is not working as required.

CHAPTER 11 – EN81-21 LOW PIT/LOW HEADROOM APPLICATIONS

EN81-21 standard sets the basic rules to design lifts which do not satisfy shaft requirements of EN81-20/50. It is obvious that the risk analysis is based on the mechanical design of the lift. However, the controller is involved into the process to detect dangerous situations to inhibit or prevent motion. There are many different solutions to EN81-21 lifts since the risk factors are not the same in all of them as well as designers or manufacturers are not the same. Therefore, it is impossible to say that one electrical solution will operate all EN81-21 applications, properly.

ILC supports some special devices designed for EN81-21 applications. Furthermore, it offers some very general functions.

When starting to a new EN81-21 project, the offered functions and sample projects should be carefully checked. It is recommended to consult support services before ordering a product.

11.1) AMI-100 DEVICE

AMI-100 is a device used for EN81-21 applications. It is enabled after setting [B29=1]. An output should be programmed as AMI-100 device coil [66]. The operation is performed by regarding the state of the device learned by the inputs ARN and ARD. The coil is not activated in inspection mode but in recall mode. Related parameters are listed below. The state of the AMI-100 device is checked through ARN and ARD switches. When the device is retracted ARN is closed and when extended ARD is closed. If the contacts of ARN and ARD are not correct then errors are evoked.

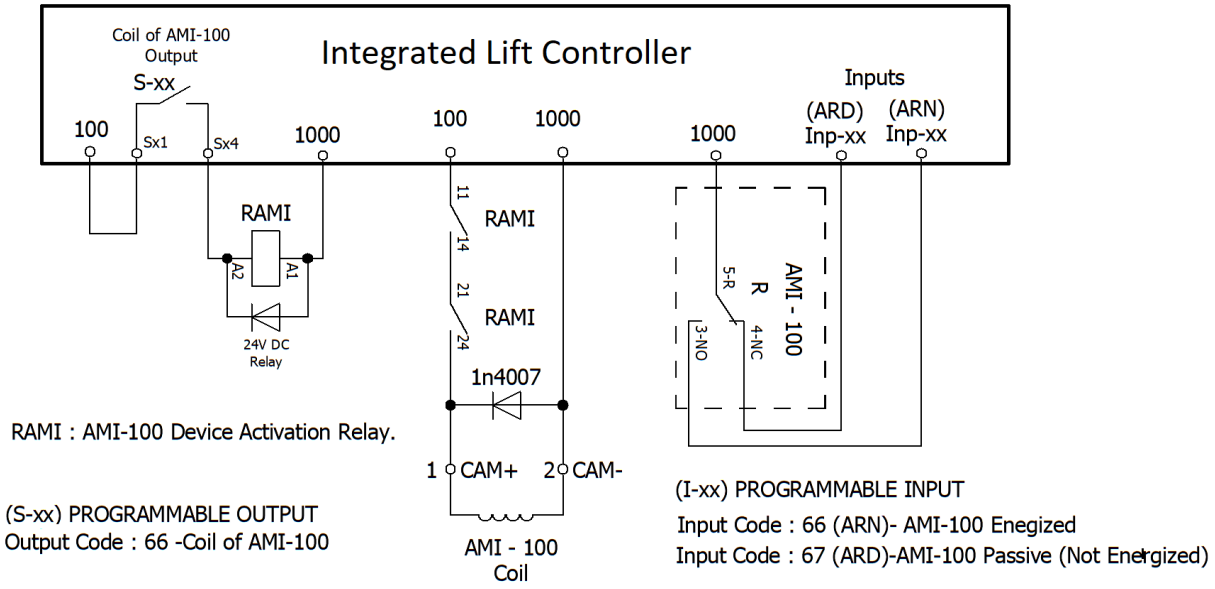

Figure 11.1

AMI-100 Related Parameters are as follows

Parameter B29	
0	No AMI-100
1	AMI-100 device operation is enabled.

Output	
O 66	Amı-100 device coil output (for EN81-21)

Inputs	
66	ARN This input is active when AMI-device has been retracted.
67	ARD This input is active when AMI-device has not been extended.

Errors		
42	**ARN Contact Error**	ARN=0 when AMI coil is activated or ARN=1 when AMI-coil is passive.
43	**ARD Contact Error**	ARD=0 when AMI coil is activated or ARD=1 when AMI- coil is passive.
51	ARN+ARD Error	ARD and ARN contacts are wrong simultaneously.

11.2) CHECKING OF MANUAL OPENING OF SHAFT DOORS WITH TRIANGULAR KEY

If the shaft doors are opened manually by triangular key then DIK input goes to low and the system is entered automatically into inspection mode. No further motion is allowed. In order to escape from inspection mode DIK Reset Relay must be activated once.

There are two main solutions for resetting DIK regarding to the door locking system of the landing doors. One of the systems described below should be selected by regarding to the contact type of the landing door, normally closed or bi-stable.

11.2.1 Landing doors with Normally Closed Contacts

In Figure 11.2a KDK contactors are used as bi-stable contacts.

Inputs	
DIK (55)	**Door inspection key input** This input function is used to detect if the automatic landing door is opened manually with a key. When this input which is normally closed is open, the system switches to inspection mode automatically. The system will return to normal mode only after a manual reset.
DRB (65)	**Door reset input** (Reset button or switch)
MDK (79)	**Checking of the bi-stable state of the contactors** (EN81-21). This input is used when contactors are employed to make the DIK function stationary.

Output	

O 70	**Door reset coil.** When activated landing door manual opening system will be reset.

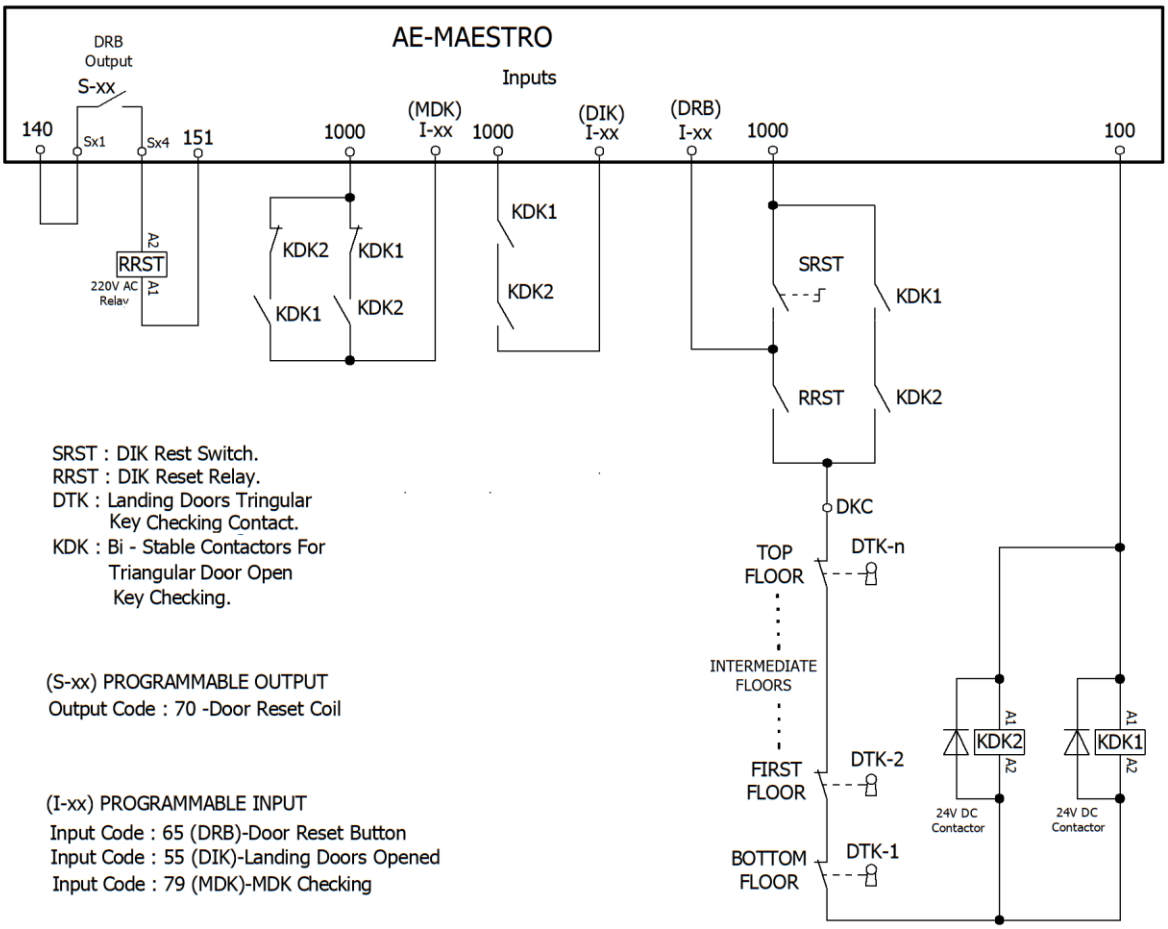

Figure 11.2a

11.2.2 Landing doors with Bi-Stable Contacts

If a system has bi-stable contacts then there is no need to use KDK contactors. Refer to the manufacturer's data sheet.

CHAPTER 12 – SPECIAL FUNCTIONS

There are some special functions built in in the software of ILC for some special applications. Each special function has been implemented by using a number of parameters as well as I/O functions.

12.1) TKF

TKF contactors are used in MRL systems to prevent opening both brakes simultaneously while line voltage is present by pressing two brake open buttons manually. The electrical connections of TKF contactor coil and its normally open contact are shown in Figure 12.1**.**

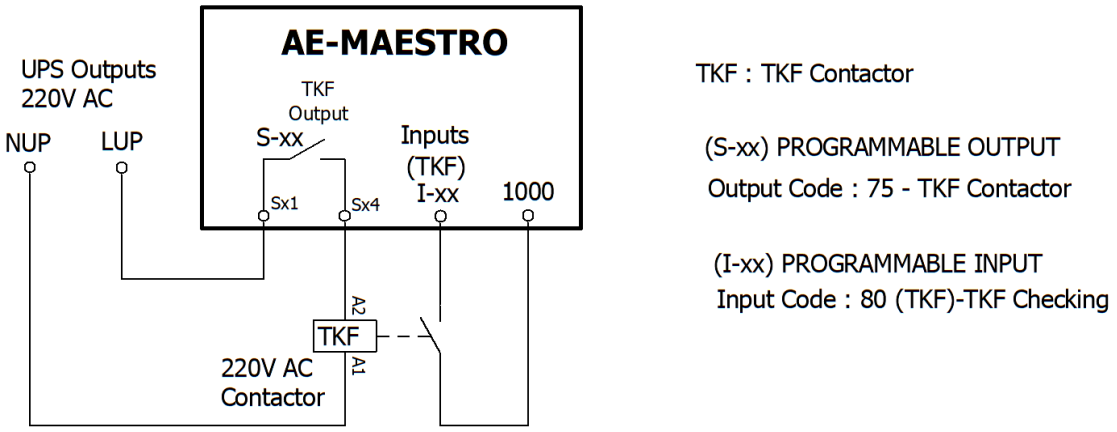

Figure 12.1

TKF is a contactor connected to power supply via TKF output. The state of TKF contactors is checked through TKF input. At start up the system checks the contactor contacts once if they are shorted, If so then error 90 is generated. After that it checks if the activation of the contactors. If TKF input becomes LOW while TKF coil is energized then error 30 is evoked. The other contacts of the TKF are connected in series with brake opening buttons in such a way to prevent both brakes to be opened simultaneously when line power is present.

12.2) SIMULATION MODE

It is possible to run ILC in simulation mode. Simulation can be performed for test, demo or education purposes where the device can run with or without motor connected. **Simulation operation is not allowed when the controller has been connected to the lift motor in the shaft or machine room.**
When operated in simulation mode the device runs simulating shaft switches and encoder pulses. Therefore, ML1, ML2, MKD, MKU, 817, 818 switches and encoder are simulated, not read.

The procedure is as follows:

1- Set parameter [A19=1].
2- Adjust one input as SIM (62).

3- Set floor selector to motor encoder [A05=2].
4- Go to SERVICES menu and select **CLEAR ENCODER DATA** line to set all floor positions for operation.
5- Activate SIM input by connecting to 1000 terminal.
6- Then ILC will switch to simulation mode.

In simulation mode all functions are performed normally except shaft switches and encoder pulses. Besides that, some errors are inhibited. You can simulate motion simply by giving calls. The virtual car will move and open its doors at arrival at the target floor.